Technical Data

Allen-Bradley

Kinetix Motion Accessories Specifications

Bulletin 2090, 2094, 1394, 8720MC

Topic	Page
Summary of Changes	1
2090-Series Single Motor Cables	2
2090-Series Power and Feedback Cables	15
2090-Series Interface Cables	53
2090-Series Kinetix 6000M Integrated Drive-Motor Cables	61
Breakout Components and Connector Kits	69
Bulletin 2094 Power Rail	81
Bulletin 2094 Shunt Module	84
Bulletin 2094 Slot-filler Module	88
Bulletin 2094 Mounting Brackets	89

Topic, continued	Page
Connector Sets	91
Kinetix Safe-off Components	92
External Auxiliary Encoders	96
Line Interface Modules	98
AC Line Filters	109
External Shunt Modules	117
Resistive Brake Modules	119
8720MC Regenerative Power Supplies	122
8720MC Line Reactors	127
Additional Resources	130

This document provides catalog numbers, product specifications, and dimensions for Allen-Bradley® servo drive accessories.

Use this publication along with the Kinetix® Motion Control Selection Guide, publication KNX-SG001, and the drive-system design guides to help make decisions on the motion control products that are best suited for your system requirements. See Additional Resources on page 130 for publication numbers.

Summary of Changes

This manual contains new and updated information as indicated in the following table.

Topic	Page
Added links to publications with maximum cable length information specific to the drive and compatible motor or actuator.	6, 23
Added Kinetix VP (Bulletin VPAR) cable selection specifications.	8
Added reference to publication 2090-IN042 for help using the connector kits, flange kits, and crimp tools that are described in the tables beginning on page 49.	48
Updated the Bulletin 2090 AC line filter catalog numbers that are for use with Kinetix 300 and Kinetix 350 servo drives.	109
Added AC line filter specifications for catalog numbers 2090-UXLF-106, 2090-UXLF-110, and 2090-UXLF-123.	110
Added AC line filter dimensions for catalog numbers 2090-UXLF-106, 2090-UXLF-110, and 2090-UXLF-123.	111
Updated Bulletin 8720MC-RPS regenerative power supply features, specifications, and dimensions.	122…127
Updated Bulletin 8720MC line reactor specifications and dimensions.	127…129

LISTEN. THINK. SOLVE.®

Allen-Bradley • Rockwell Software

Rockwell Automation

2090-Series Single Motor Cables

Allen-Bradley single motor cables combine motor power, feedback, and brake conductors all in a single shielded cable. Standard (non-flex) motor cables with rugged SpeedTec DIN connectors are designed for use with Kinetix 5500 and Kinetix 5700 drive systems, and intended for static applications. Continuous-flex rated cables, intended for rolling and reverse bending applications, are also available.

IMPORTANT Due to the unique characteristics of single-cable technology, which is designed for and tested with the Kinetix 5000 drive families and Kinetix VP motors, building your own cables or using third-party cable is not an option.

IMPORTANT Flying-lead motor power, feedback, and (optional) brake conductors terminate at the drive by using the 2198-KITCON-DSL feedback connector kit. Refer to the Kinetix Servo Drives Specifications Technical Data, publication KNX-TD003, for more information on the 2198-KITCON-DSL connector kit that is used with the Kinetix 5500 and Kinetix 5700 servo drives.

IMPORTANT Continuous-flex single motor cables have a minimum bend radius of 10 times the cable diameter.

These 2090-Series motor cables with SpeedTec DIN connectors, designed by Rockwell Automation for optimal performance with Kinetix 5000 drive families and Kinetix VP servo motors, offer best-in-class features and standards compliance. The single-cable design includes power, feedback, and brake conductors. The continuous-flex cable option, cable lengths in 1 m (3.3 ft) increments, and SpeedTec connectors provide machine builders with complete control of the cable requirements in their machines.

Single Motor Cable Features

- NFPA-79 compliant
- UL Listings: 10, 8, and 6 AWG cable - Flexible VFD servo cable, 18 and 14 AWG cables - PLTC-ER
  - UL AWM, 1000V, 105 °C construction
  - cUR AWM I/II A/B, 600V, 105 °C construction for 6 and 8 AWG cables
- CSA AWM I/II A/B, 1000V, 105 °C construction for 10, 14, and 18 AWG cables
- Low capacitance design to maximize system power density
- SpeedTec connection system
- Encoder communication data pair with state of the art noise rejection
- DESINA compliant jacket (orange) coloring for easy identification and separation of cables in a machine
- Rated flex-cycles in linear flexing applications
  - 10, 14, and 18 AWG continuous-flex cables and continuous-flex extension cables are suitable for 20 million flex-cycles and 10 million cycles in bending (tic-toc) applications (see illustration on page 3)
  - 8 AWG continuous-flex cables and continuous-flex extension cables are suitable for 6.5 million flex-cycles
  - 6 AWG continuous-flex cables and continuous-flex extension cables are suitable for 5.0 million flex-cycles
- TPE jacket with superior mechanical and chemical properties
- Cable features overall tinned copper braid with aluminum/polyester tape, delivering 100% coverage for excellent EMC/EMI performance and permits power and signal conductors in a single cable
- Cables are included in the Rockwell Automation® servo system Declaration of Conformity (DoC)

Types of Cable Flexing

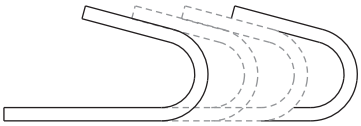

Rolling Motion

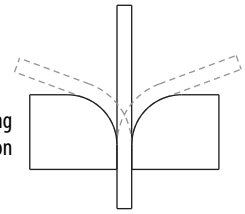

Reverse Bending (tic-toc) Motion

Catalog Numbers - 2090-Series Single Motor Cables

Catalog numbers consist of various characters, each of which identifies a specific option for that component. Use the catalog numbering charts below to understand the configuration of your component. For questions regarding product availability, contact your Allen-Bradley distributor.

2090 - C S*x* M1 D*x* - *xx* A*x* *xx*

Cable Length
Refer to Technical Specifications - 2090-Series Single Motor Cables beginning on page 9.

Cable Type
AA = Standard, non-flex
AF = Continuous-flex

Wire Gauge Size (applies to power conductors)
18, 14, 10, 8, 6 AWG

Drive-end Connector Type
DF = Drive-end, flying-leads (lead length optimized for Kinetix 5500 drives)
DE = Drive-end, flying-lead power/brake wires and pre-wired feedback connector kit (optimized for Kinetix 5700 drives)
DG = Drive-end, flying-leads (longer leads optimized for Kinetix 5500 or Kinetix 5700 drives)
E1 = Extension receptacle (SpeedTec ready)

Motor-end Connector Type
M1 = Single SpeedTec DIN connector

Cable Type
SB = Single motor power with brake wires
SW = Single motor power only

Accessory Component
C = Cable

Bulletin Number

2090-Series Single Motor Cables Overview

2090-CS*x*M1DF and 2090-CS*x*M1DG single motor cables with flying leads provide power, feedback, and brake conductors in a single shielded cable. Refer to Technical Specifications - 2090-Series Single Motor Cables on page 9 for cable descriptions, weights, and standard cable lengths.

Single Motor Cable Descriptions (flying leads)

Cable Cat. No.	Description	Cable Configuration Motor End / Drive End	Motor Connector
2090-CSBM1DF-*xx*AA*xx* 2090-CSBM1DF-*xx*AF*xx* 2090-CSBM1DG-*xx*AA*xx* 2090-CSBM1DG-*xx*AF*xx*	• Drive-end flying-leads (DF) (DG = longer lead lengths) • Power/feedback/brake wires (SB) • Standard, non-flex (AA) • Continuous-flex (AF)	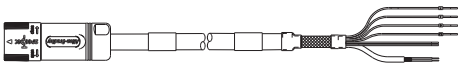	SpeedTec DIN
2090-CSWM1DF-*xx*AA*xx* 2090-CSWM1DG-*xx*AA*xx*	• Drive-end flying-leads (DF) (DG = longer lead lengths) • Power/feedback wires only (SW)	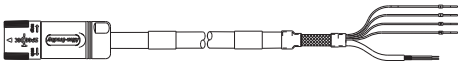	

2090-CS*x*M1DE single motor cables also provide power, feedback, and brake conductors in a single shielded cable. However, 2090-CS*x*M1**DE** cables include the 2198-KITCON-DSL feedback connector kit that is pre-assembled with the feedback conductors. See Technical Specifications - 2090-Series Single Motor Cables on page 9 for cable descriptions, weights, and standard cable lengths.

Single Motor Cable Descriptions (feedback connector kit)

Cable Cat. No.	Description	Cable Configuration	Motor Connector
		Motor End / Drive End	
2090-CSBM1DE-*xx*AA*xx* 2090-CSBM1DE-*xx*AF*xx*	• Drive-end feedback connector kit (DE) • Power/feedback/brake wires (SB) • Standard, non-flex (AA) • Continuous-flex (AF)	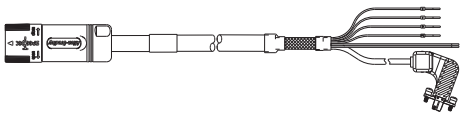	SpeedTec DIN
2090-CSWM1DE-*xx*AA*xx*	• Drive-end feedback connector kit (DE) • Power/feedback wires only (SW)	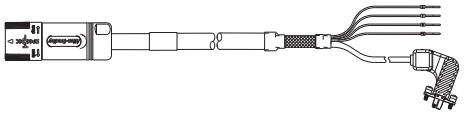	

Extension cables provide continuous-flex cable technology between your standard (non-flex) cable and the continuous-flex application. The IP rating for continuous-flex extension cables is consistent with the motor/actuator and cable combination they are extending. Extension cables are available with 18, 14, 10, 8, and 6 AWG power conductors and lengths up to 30 m (98.4 ft).

Single Continuous-flex Extension Cable Description

Cable Cat. No.	Description	Cable Configuration	Motor Connector
		Motor End / Drive End	
2090-CSBM1E1-*xx*AF*xx*	• Drive-end (male) connector, extension (E1) (1) • Motor-end SpeedTec DIN cable plug (M1)	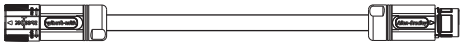	SpeedTec DIN

(1) SpeedTec DIN connector (motor end) and male connector for extending SpeedTec DIN cable. Refer to Single Continuous-flex Extension Cable with Bulkhead Adapter on page 5.

Typical Single Motor Cable Applications

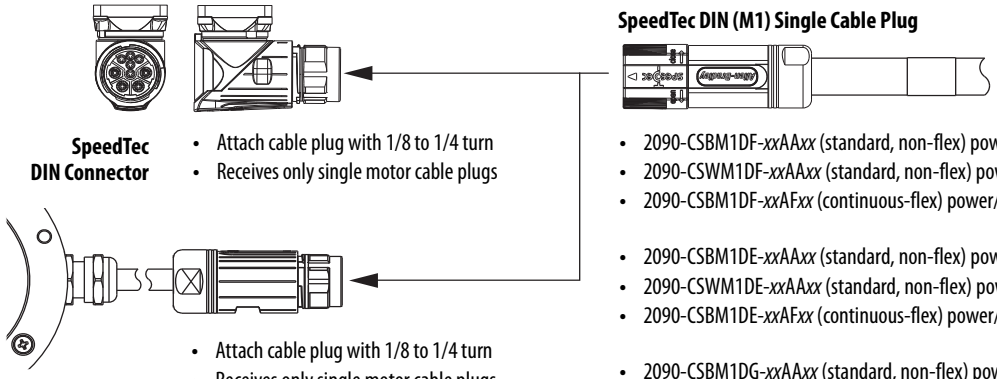

SpeedTec DIN Connector

- Attach cable plug with 1/8 to 1/4 turn
- Receives only single motor cable plugs

- Attach cable plug with 1/8 to 1/4 turn
- Receives only single motor cable plugs
- 5 m (16.4 ft) cable extension

SpeedTec DIN (M1) Single Cable Plug

- 2090-CSBM1DF-*xx*AA*xx* (standard, non-flex) power/feedback/brake cables
- 2090-CSWM1DF-*xx*AA*xx* (standard, non-flex) power/feedback cables
- 2090-CSBM1DF-*xx*AF*xx* (continuous-flex) power/feedback/brake cables

- 2090-CSBM1DE-*xx*AA*xx* (standard, non-flex) power/feedback/brake cables
- 2090-CSWM1DE-*xx*AA*xx* (standard, non-flex) power/feedback cables
- 2090-CSBM1DE-*xx*AF*xx* (continuous-flex) power/feedback/brake cables

- 2090-CSBM1DG-*xx*AA*xx* (standard, non-flex) power/feedback/brake cables
- 2090-CSWM1DG-*xx*AA*xx* (standard, non-flex) power/feedback cables
- 2090-CSBM1DG-*xx*AF*xx* (continuous-flex) power/feedback/brake cables

The cable technology used in single cables is the same regardless of the catalog number. What is different about each cable is the lead preparation and feedback conductor terminations.

- 2090-CS*x*M1DF cable conductors have flying-leads and lead preparation that is designed specifically for Kinetix 5500 servo drives. No on-site lead preparation is required.
- 2090-CS*x*M1DE cables include the 2198-KITCON-DSL connector kit. The kit is pre-assembled with the feedback conductors and lead preparation for the flying-lead power conductors is designed specifically for Kinetix 5700 servo drives. No on-site lead preparation is required.
- 2090-CS*x*M1DG cable conductors have flying-leads and lead preparation that is designed for either Kinetix 5500 or Kinetix 5700 servo drives. No on-site lead preparation is required, however, 2090-CS*x*M1DG cable leads are longer than 2090-CS*x*M1DF cable leads to accommodate either drive family.

IMPORTANT To avoid problems securing the cable in the shield clamp and routing the flying leads to the motor power, feedback, and brake connector plugs, make sure that you are using the cable that is best suited for your application.

- Use 2090-CS*x*M1DF cables with Kinetix 5500 servo drives (2198-KITCON-DSL connector kit is included with the drive)
- Use 2090-CS*x*M1DE cables with Kinetix 5700 servo drives (2198-KITCON-DSL connector kit is pre-wired to the feedback conductors)
- Use 2090-CS*x*M1DG cables with Kinetix 5500 or Kinetix 5700 servo drives (when used with Kinetix 5700 drives, the 2198-KITCON-DSL connector kit is ordered separately)

Single Continuous-flex Extension Cable with Bulkhead Adapter

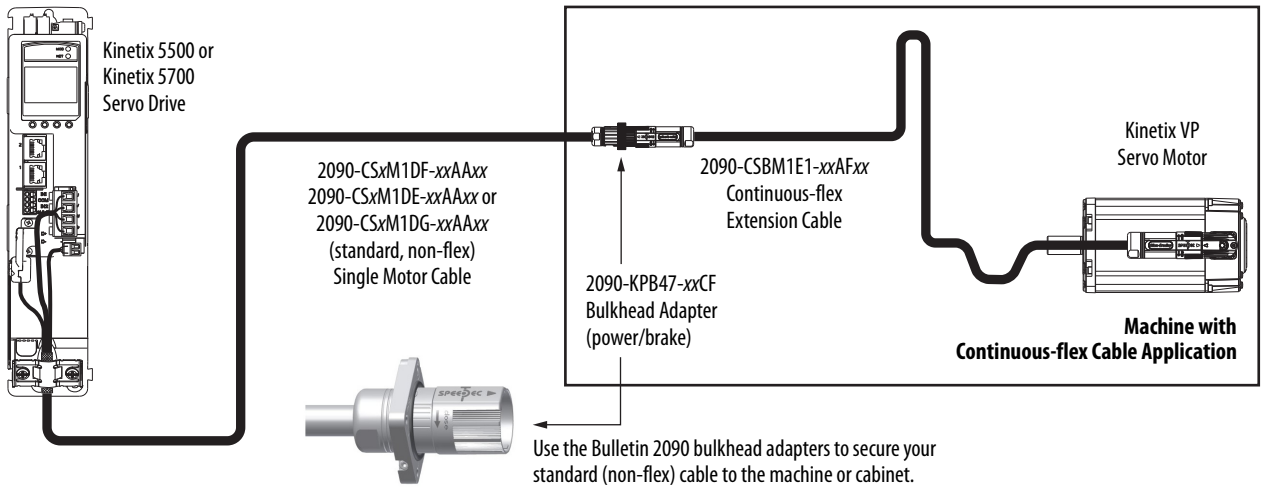

Continuous-flex Extension Cables

Continuous-flex Cable Cat. No.	Description
2090-CSBM1E1-18AF*xx*	Power/brake/feedback extension cable, SpeedTec DIN (male/female) connectors
2090-CSBM1E1-14AF*xx*	
2090-CSBM1E1-10AF*xx*	
2090-CSBM1E1-08AF*xx*	
2090-CSBM1E1-06AF*xx*	

2090-Series Single Motor Cable Selection

These tables provide single motor cable catalog numbers for use with Kinetix VP servo motors. Single motor cables include conductors for motor power, feedback, and motor brakes (if applicable). The IP rating is dependent on the use of Bulletin 2090 cables as listed in the table.

IMPORTANT Maximum motor cable length depends on the feedback type and overall system design. The drive-system power supply, AC input-power type, and AC input voltage are among the configuration variables. For more information on maximum cable lengths see your servo drive user manual or the Kinetix Servo Drives Technical Data, publication KNX-TD003.

Kinetix VP (Bulletin VPL) 200V-class Low Inertia Motors

Motor Cat. No.	Compatible (1) Drive Cat. No.	Feedback Type	Cable Cat. No. (2)	IP Rating
VPL-A063*xx*	2198-H*xxx*-ERS 2198-H*xxx*-ERS2	Single-turn or Absolute, Multi-turn Digital Encoder SIL 2/PLd Rated Hiperface DSL Protocol	2090-CSBM1D*x*-18AA*xx* or 2090-CSWM1D*x*-18AA*xx* (standard, non-flex) 2090-CSBM1D*x*-18AF*xx* (continuous-flex)	Shaft seal is optional: IP5*x* without shaft seal IP66 with shaft seal
VPL-A0751E, VPL-A0752C, VPL-A0753C				
VPL-A0752E, VPL-A0753E			2090-CSBM1D*x*-14AA*xx* or 2090-CSWM1D*x*-14AA*xx* (standard, non-flex) 2090-CSBM1D*x*-14AF*xx* (continuous-flex)	
VPL-A1001C			2090-CSBM1D*x*-18AA*xx* or 2090-CSWM1D*x*-18AA*xx* (standard, non-flex) 2090-CSBM1D*x*-18AF*xx* (continuous-flex)	
VPL-A1001M, VPL-A1002*x*, VPL-A1003*x*			2090-CSBM1D*x*-14AA*xx* or 2090-CSWM1D*x*-14AA*xx* (standard, non-flex) 2090-CSBM1D*x*-14AF*xx* (continuous-flex)	
VPL-A1152*x*, VPL-A1153*x*				
VPL-A1303*x*, VPL-A1304*x*, VPL-A1306*x*				

(1) For information on maximum cable lengths see the Kinetix 5500 Servo Drives User Manual, publication 2198-UM001.
(2) Use 2090-CS*x*M1DF or 2090-CS*x*M1DG cables with Kinetix 5500 (2198-H*xxx*-ERS*x*) servo drives.

Kinetix VP (Bulletin VPL) 400V-class Low Inertia Motors

Motor Cat. No.	Compatible (1) Drive Cat. No.	Feedback Type	Cable Cat. No. (2)	IP Rating
VPL-B063*xx*	2198-H*xxx*-ERS 2198-H*xxx*-ERS2 2198-D*xxx*-ERS3 2198-D*xxx*-ERS4	Single-turn or Absolute, Multi-turn Digital Encoder SIL 2/PLd Rated Hiperface DSL Protocol	2090-CSBM1D*x*-18AA*xx* or 2090-CSWM1D*x*-18AA*xx* (standard, non-flex) 2090-CSBM1D*x*-18AF*xx* (continuous-flex)	Shaft seal is optional: IP5*x* without shaft seal IP66 with shaft seal
VPL-B0751M, VPL-B0752E, VPL-B0752F, VPL-B0753E, VPL-B0753F				
VPL-B1001M, VPL-B1002E, VPL-B1003C				
VPL-B0752M, VPL-B0753M			2090-CSBM1D*x*-14AA*xx* or 2090-CSWM1D*x*-14AA*xx* (standard, non-flex) 2090-CSBM1D*x*-14AF*xx* (continuous-flex)	
VPL-B1002M, VPL-B1003F, VPL-B1003T				
VPL-B1152C			2090-CSBM1D*x*-18AA*xx* or 2090-CSWM1D*x*-18AA*xx* (standard, non-flex) 2090-CSBM1D*x*-18AF*xx* (continuous-flex)	
VPL-B1152F, VPL-B1152T, VPL-B1153E, VPL-B1153F			2090-CSBM1D*x*-14AA*xx* or 2090-CSWM1D*x*-14AA*xx* (standard, non-flex) 2090-CSBM1D*x*-14AF*xx* (continuous-flex)	
VPL-B1303*x*, VPL-B1304*x*, VPL-B1306*x*,				
VPL-B1651C, VPL-B1651F, VPL-B1652C, VPL-B1652F, VPL-B1653C, VPL-B1653D, VPL-B1654B				
VPL-B1654D			2090-CSBM1D*x*-10AF*xx* (continuous-flex)	

(1) For information on maximum cable lengths see Kinetix 5700 Servo Drives User Manual, publication 2198-UM002, or Kinetix 5500 Servo Drives User Manual, publication 2198-UM001.
(2) Use 2090-CS*x*M1DF or 2090-CS*x*M1DG cables with Kinetix 5500 (2198-H*xxx*-ERS*x*) servo drives. Use 2090-CS*x*M1DE or 2090-CS*x*M1DG cables with Kinetix 5700 (2198-*xxxx*-ERS*x*) servo drives.

For cable configuration illustrations and feature descriptions, by catalog number, refer to 2090-Series Single Motor Cables Overview beginning on page 3.
Cable length *xx* is in meters, 01 (3.3)…50 (164) in 1.0 m (3.3 ft) increments for 2090-CS*x*M1DF and 2090-CS*x*M1DG cables.
Refer to Technical Specifications - 2090-Series Single Motor Cables on page 9.

Kinetix VP (Bulletin VPC) 400V-class Continuous Duty Motors

Motor Cat. No.	Drive Cat. No. (1) (2)	Feedback Type	Cable Cat. No. (3)	IP Rating
VPC-B1652*xx*-Q, VPC-B1653*xx*-Q	2198-D*xxx*-ERS3 2198-S*xxx*-ERS3 2198-D*xxx*-ERS4 2198-S*xxx*-ERS4	Absolute, Multi-turn Digital Encoder • SIL 2/PLd Rated • Hiperface DSL Protocol	2090-CSBM1D*x*-14AA*xx* or 2090-CSWM1D*x*-14AA*xx* (standard, non-flex) 2090-CSBM1D*x*-14AF*xx* (continuous-flex)	Shaft seal is standard. IP65 with specified cables.
VPC-B2153*xx*-Q, VPC-B21549-Q				
VPC-B1654D-Q			2090-CSBM1D*x*-10AF*xx* (continuous-flex)	
VPC-B2154A-Q				
VPC-B30029-Q				
VPC-B2154D-Q, VPC-B2155D-Q			2090-CSBM1DE-08AF*xx* (continuous-flex)	
VPC-B3002A-Q, VPC-B30039-Q, VPC-B30049-Q				
VPC-B2156D-Q			2090-CSBM1DE-06AF*xx* (continuous-flex)	
VPC-B3003A-Q				

(1) For information on maximum cable lengths see the Kinetix 5700 Servo Drives User Manual, publication 2198-UM002.
(2) 2198-S263-ERS*x* and 2198-S312-ERS*x* single-axis inverters do not support 2090-CS*x*M1D*x* single cables.
(3) Use 2090-CS*x*M1DE or 2090-CS*x*M1DG cables with Kinetix 5700 (2198-*xxxx*-ERS*x*) servo drives.

Kinetix VP (Bulletin VPF) 200V-class Food Grade Motors

Motor Cat. No. (200V-class)	Drive Cat. No. (1)	Feedback Type	Cable Cat. No. (2)	IP Rating
VPF-A0632F, VPF-A0633C, VPF-A0633F	2198-H*xxx*-ERS 2198-H*xxx*-ERS2	Single-turn or Absolute, Multi-turn Digital Encoder • SIL 2/PLd Rated • Hiperface DSL Protocol	2090-CSBM1D*x*-18AA*xx* or 2090-CSWM1D*x*-18AA*xx* (standard, non-flex) 2090-CSBM1D*x*-18AF*xx* (continuous-flex)	Shaft seal is standard. IP66/IP67 with use of environmentally sealed cable connectors.
VPF-A0752C, VPF-A0753C				
VPF-A1001C				
VPF-A0752E, VPF-A0753E			2090-CSBM1D*x*-14AA*xx* or 2090-CSWM1D*x*-14AA*xx* (standard, non-flex) 2090-CSBM1D*x*-14AF*xx* (continuous-flex)	
VPF-A1001M, VPF-A1002C, VPF-A1002F VPF-A1003C, VPF-A1003E, VPF-A1003F				
VPF-A1153C				
VPF-A1303B, VPF-A1303F, VPF-A1304A, VPF-A1304D				

(1) For information on maximum cable lengths see the Kinetix 5500 Servo Drives User Manual, publication 2198-UM001.
(2) Use 2090-CS*x*M1DF or 2090-CS*x*M1DG cables with Kinetix 5500 (2198-H*xxx*-ERS*x*) servo drives.

Kinetix VP (Bulletin VPF) 400V-class Food Grade Motors

Motor Cat. No. (400V-class)	Drive Cat. No. (1)	Feedback Type	Cable Cat. No. (2)	IP Rating
VPF-B0632F, VPF-B0632T VPF-B0633M, VPF-B0633T	2198-H*xxx*-ERS 2198-H*xxx*-ERS2 2198-D*xxx*-ERS3 2198-D*xxx*-ERS4	Single-turn or Absolute, Multi-turn Digital Encoder • SIL 2/PLd Rated • Hiperface DSL Protocol	2090-CSBM1D*x*-18AA*xx* or 2090-CSWM1D*x*-18AA*xx* (standard, non-flex) 2090-CSBM1D*x*-18AF*xx* (continuous-flex)	Shaft seal is standard. IP66/IP67 with use of environmentally sealed cable connectors.
VPF-B0752E, VPF-B0752F, VPF-B0753E, VPF-B0753F				
VPF-B1001M, VPF-B1002E, VPF-B1003C				
VPF-B0752M, VPF-B0753M			2090-CSBM1D*x*-14AA*xx* or 2090-CSWM1D*x*-14AA*xx* (standard, non-flex) 2090-CSBM1D*x*-14AF*xx* (continuous-flex)	
VPF-B1002M, VPF-B1003F, VPF-B1003T				
VPF-B1153E, VPF-B1153F				
VPF-B1303C, VPF-B1303F, VPF-B1304C, VPF-B1304E				
VPF-B1652C				

(1) For information on maximum cable lengths see Kinetix 5700 Servo Drives User Manual, publication 2198-UM002, or Kinetix 5500 Servo Drives User Manual, publication 2198-UM001.
(2) Use 2090-CS*x*M1DF or 2090-CS*x*M1DG cables with Kinetix 5500 (2198-H*xxx*-ERS*x*) servo drives. Use 2090-CS*x*M1DE or 2090-CS*x*M1DG cables with Kinetix 5700 (2198-*xxxx*-ERS*x*) servo drives.

For cable configuration illustrations and feature descriptions, by catalog number, refer to 2090-Series Single Motor Cables Overview beginning on page 3.
Cable length *xx* is in meters, 01 (3.3)…50 (164) in 1.0 m (3.3 ft) increments for 2090-CS*x*M1DF and 2090-CS*x*M1DG cables, 01 (3.3)…90 (294) in 1.0 m (3.3 ft) increments for 2090-CS*x*M1DE cables.
Refer to Technical Specifications - 2090-Series Single Motor Cables on page 9.

Kinetix VP (Bulletin VPS) 400V-class Stainless Steel Motors

Motor Cat. No.	Drive Cat. No. (1)	Feedback Type	Cable Cat. No. (2)	IP Rating
VPS-B1304D	2198-H*xxx*-ERS 2198-H*xxx*-ERS2 2198-D*xxx*-ERS3 2198-D*xxx*-ERS4	Absolute, Multi-turn Digital Encoder with Hiperface DSL Protocol	2090-CSWM1D*x*-14AA*xx* (standard, non-flex) 2090-CSBM1D*x*-14AF*xx* (continuous-flex)	Shaft seal is standard. IP66/67/IP69K with shaft seal and slinger.
VPS-B1653D				

(1) For information on maximum cable lengths see Kinetix 5700 Servo Drives User Manual, publication 2198-UM002, or Kinetix 5500 Servo Drives User Manual, publication 2198-UM001.
(2) Use 2090-CS*x*M1DF or 2090-CS*x*M1DG cables with Kinetix 5500 (2198-H*xxx*-ERS*x*) servo drives. Use 2090-CS*x*M1DE or 2090-CS*x*M1DG cables with Kinetix 5700 (2198-*xxxx*-ERS*x*) servo drives.

Kinetix VP (Bulletin VPAR) 200V-class Electric Cylinders

Actuator Cat. No. (1)	Drive Cat. No. (2)	Feedback Type	Cable Cat. No. (3)	IP Rating
VPAR-A1*xxxxx*-P VPAR-A2*xxxx*C-P	2198-H*xxx*-ERS 2198-H*xxx*-ERS2	Absolute, Multi-turn Digital Encoder with Hiperface DSL Protocol	2090-CSBM1D*x*-18AA*xx* or 2090-CSWM1D*x*-18AA*xx* (standard, non-flex) 2090-CSBM1D*x*-18AF*xx* (continuous-flex)	IP40 (4) IP66 (5)
VPAR-A2*xxxx*F-P VPAR-A3*xxxxx*-P			2090-CSBM1D*x*-14AA*xx* or 2090-CSWM1D*x*-14AA*xx* (standard, non-flex) 2090-CSBM1D*x*-14AF*xx* (continuous-flex)	

(1) Encoder option for VPAR-A*xxxxx* electric cylinders is -P (absolute multi-turn digital encoder, Hiperface DSL protocol) only.
(2) For information on maximum cable lengths see Kinetix 5500 Servo Drives User Manual, publication 2198-UM001.

Kinetix VP (Bulletin VPAR) 400V-class Electric Cylinders

Actuator Cat. No. (1)	Drive Cat. No. (2)	Feedback Type	Cable Cat. No. (3)	IP Rating
VPAR-B1*xxxxx*-*x* VPAR-B2*xxxxx*-*x*	2198-H*xxx*-ERS 2198-H*xxx*-ERS2 2198-D*xxx*-ERS3 2198-D*xxx*-ERS4	Absolute, Multi-turn Digital Encoder • SIL 2/PLd Rated • Hiperface DSL Protocol	2090-CSBM1D*x*-18AA*xx* or 2090-CSWM1D*x*-18AA*xx* (standard, non-flex) 2090-CSBM1D*x*-18AF*xx* (continuous-flex)	IP40 (4) IP66 (5)
VPAR-B3*xxxxx*-*x*			2090-CSBM1D*x*-14AA*xx* or 2090-CSWM1D*x*-14AA*xx* (standard, non-flex) 2090-CSBM1D*x*-14AF*xx* (continuous-flex)	

(1) Encoder options for VPAR-B*xxxxx* electric cylinders are -Q and -W (absolute multi-turn digital encoder, Hiperface DSL protocol) SIL 2 (PLd) rated, and -P (absolute multi-turn digital encoder, Hiperface DSL protocol).
(2) For information on maximum cable lengths see Kinetix 5700 Servo Drives User Manual, publication 2198-UM002, or Kinetix 5500 Servo Drives User Manual, publication 2198-UM001.
(3) Use 2090-CS*x*M1DF or 2090-CS*x*M1DG cables with Kinetix 5500 (2198-H*xxx*-ERS*x*) servo drives. Use 2090-CS*x*M1DE or 2090-CS*x*M1DG cables with Kinetix 5700 (2198-*xxxx*-ERS*x*) servo drives.
(4) Applies to complete unit, including rod-end seal and breather port.
(5) Applies to electronic components.

For cable configuration illustrations and feature descriptions, by catalog number, refer to 2090-Series Single Motor Cables Overview beginning on page 3.
Cable length *xx* is in meters, 01 (3.3)…50 (164) in 1.0 m (3.3 ft) increments for 2090-CS*x*M1DF and 2090-CS*x*M1DG cables, 01 (3.3)…90 (294) in 1.0 m (3.3 ft) increments for 2090-CS*x*M1DE cables.
Refer to Technical Specifications - 2090-Series Single Motor Cables on page 9.

Technical Specifications - 2090-Series Single Motor Cables

IMPORTANT Maximum motor cable length depends on the feedback type and overall system design. The drive-system power supply, AC input-power type, and AC input voltage are among the configuration variables. For more information on maximum cable lengths see your servo drive user manual or the Kinetix Servo Drives Technical Data, publication KNX-TD003.

2090-CSBM1DE Cable Specifications

Cable Cat. No.	Cable Type/ Jacket Color	Description	Wire Size AWG	Weight, approx kg/m (lb/ft)	Standard Cable Lengths m (ft)
2090-CSBM1DE-18AA*xx*	Standard (non-flex) cable, Industrial TPE, Orange (DESINA, RAL 2003)	1000V hybrid cable with four power, two feedback (digital communication), and two brake conductors.	18	0.212 (0.143)	01 (3.3)…90 (295) in 1.0 m (3.3 ft) increments
2090-CSBM1DE-14AA*xx*			14	0.261 (0.175)	
2090-CSWM1DE-18AA*xx*		1000V hybrid cable with four power and two feedback (digital communication) conductors.	18	0.136 (0.091)	
2090-CSWM1DE-14AA*xx*			14	0.185 (0.124)	
2090-CSBM1DE-18AF*xx*	Continuous-flex cable, Industrial TPE, Orange (DESINA, RAL 2003)	1000V hybrid cable with four power, two feedback (digital communication), and two brake conductors.	18	0.228 (0.153)	
2090-CSBM1DE-14AF*xx*			14	0.289 (0.194)	
2090-CSBM1DE-10AF*xx*			10	0.551 (0.370)	
2090-CSBM1DE-08AF*xx*			8	1.0 (0.67)	
2090-CSBM1DE-06AF*xx*			6	1.2 (0.80)	

2090-CSBM1DF/DG Cable Specifications

Cable Cat. No.	Cable Type/ Jacket Color	Description	Wire Size AWG	Weight, approx kg/m (lb/ft)	Standard Cable Lengths m (ft)
2090-CSBM1DF-18AA*xx* 2090-CSBM1DG-18AA*xx*	Standard (non-flex) cable, Industrial TPE, Orange (DESINA, RAL 2003)	1000V hybrid cable with four power, two feedback (digital communication), and two brake conductors.	18	0.212 (0.143)	01 (3.3)…50 (164) in 1.0 m (3.3 ft) increments
2090-CSBM1DF-14AA*xx* 2090-CSBM1DG-14AA*xx*			14	0.261 (0.175)	
2090-CSWM1DF-18AA*xx* 2090-CSWM1DG-18AA*xx*		1000V hybrid cable with four power and two feedback (digital communication) conductors.	18	0.136 (0.091)	
2090-CSWM1DF-14AA*xx* 2090-CSWM1DG-14AA*xx*			14	0.185 (0.124)	
2090-CSBM1DF-18AF*xx* 2090-CSBM1DG-18AF*xx*	Continuous-flex cable, Industrial TPE, Orange (DESINA, RAL 2003)	1000V hybrid cable with four power, two feedback (digital communication), and two brake conductors.	18	0.228 (0.153)	01 (3.3)…50 (164) (1) in 1.0 m (3.3 ft) increments
2090-CSBM1DF-14AF*xx* 2090-CSBM1DG-14AF*xx*			14	0.289 (0.194)	
2090-CSBM1DF-10AF*xx* 2090-CSBM1DG-10AF*xx*			10	0.551 (0.370)	

(1) Applies to all Kinetix 5500 (frame 2 and 3) drives. For Kinetix 5500 (frame 1) drives in continuous-flex applications, 30 m (98 ft) is maximum cable length.

Single Continuous-flex Extension Cable Specifications

Extension Cable (1) Cat. No.	Cable Type/ Jacket Color	Description	Weight, approx kg/m (lb/ft)	Standard Cable Lengths m (ft)
2090-CSBM1E1-18AF*xx*	Continuous-flex cable, Industrial TPE, Orange (DESINA, RAL 2003)	SpeedTec DIN connector plug on motor end to SpeedTec DIN receptacle for mating with 2090-Series standard, non-flex power/brake/feedback cable, 600V.	0.228 (0.153)	01 (3.3)…30 (98.4) in 1.0 m (3.3 ft) increments
2090-CSBM1E1-14AF*xx*			0.289 (0.194)	
2090-CSBM1E1-10AF*xx*			0.551 (0.370)	
2090-CSBM1E1-08AF*xx*			1.0 (0.67)	
2090-CSBM1E1-06AF*xx*			1.2 (0.80)	

(1) 2090-CSBM1E1-*xx*AF*xx* extension cables are UL Listed, bulk cable, type PLTC-ER.

Dimensions - 2090-Series Single Motor Cables

When installing single cable runs between the motor and drive, be careful not to stress the cable by making bends too sharp. Refer to the table below for bend radius definitions and the dimension diagrams that follow when routing cables during system installation.

Single Cable Bend Radius Definitions

Type of Bend Radius	Type of Cable	Description
Static bend radius	Standard (non-flex)	The static (installation) bend radius and dimension B are 7 times the cable diameter: • Do not begin a static bend inside dimension B. • Use this measurement when routing the cable in a non-flex application between motor and drive (the bend area). – The bend area is where standard (non-flex) or continuous-flex cables can be bent to their specified bend radius.
	Continuous flex	
Continuous bend radius	Continuous flex	The continuous bend radius for Bulletin 2090 single motor cables is 10 times the cable diameter. • Secure the continuous-flexing area, at least 7 cable diameters (dimension B) from each end of the cable, with a rigid mount that helps prevents the cable from flexing where it connects to the motor or shield clamp. • Use this measurement when routing the cable in a continuous-flex application between motor and drive (the continuous-flexing area). – The continuous flexing area is where continuous-flex cables can be flexed repeatedly.

Single Motor Cable Dimensions (18 AWG) Brake

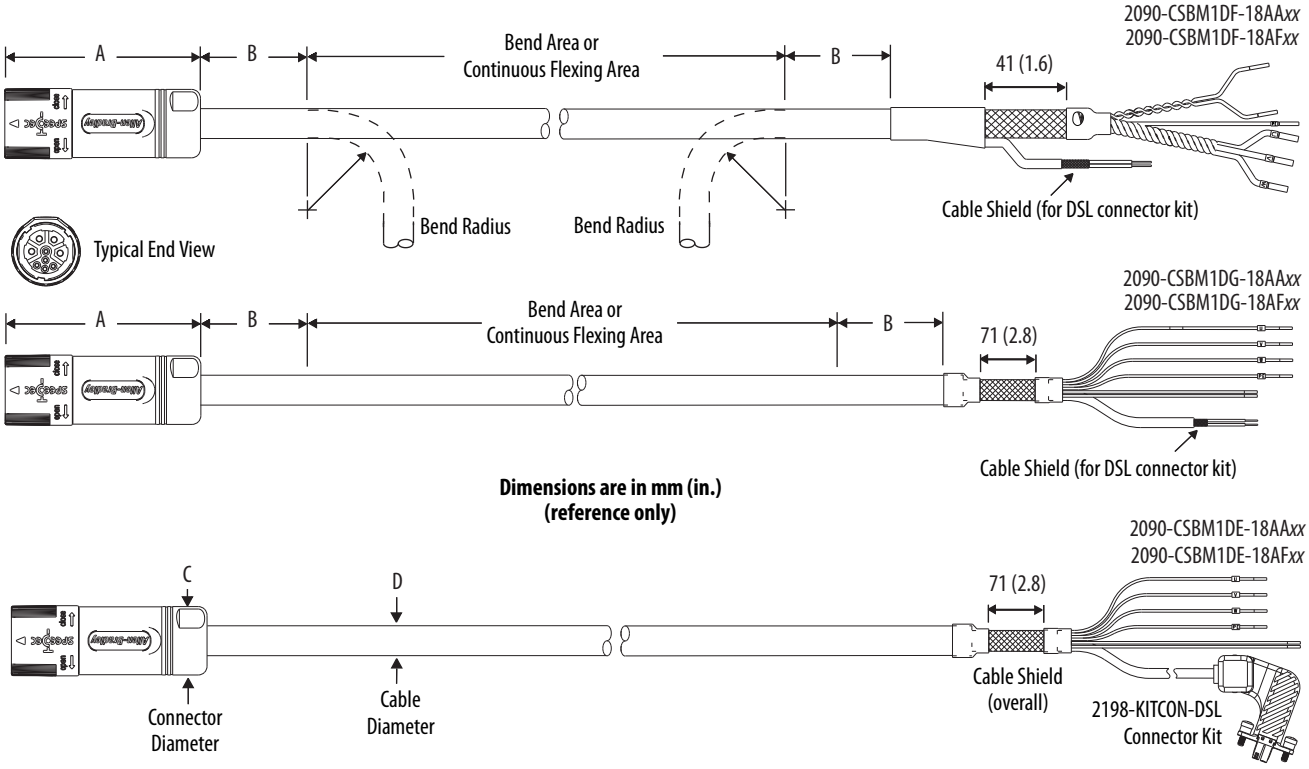

Single Motor Cable Dimensions (18 AWG) Without Brake

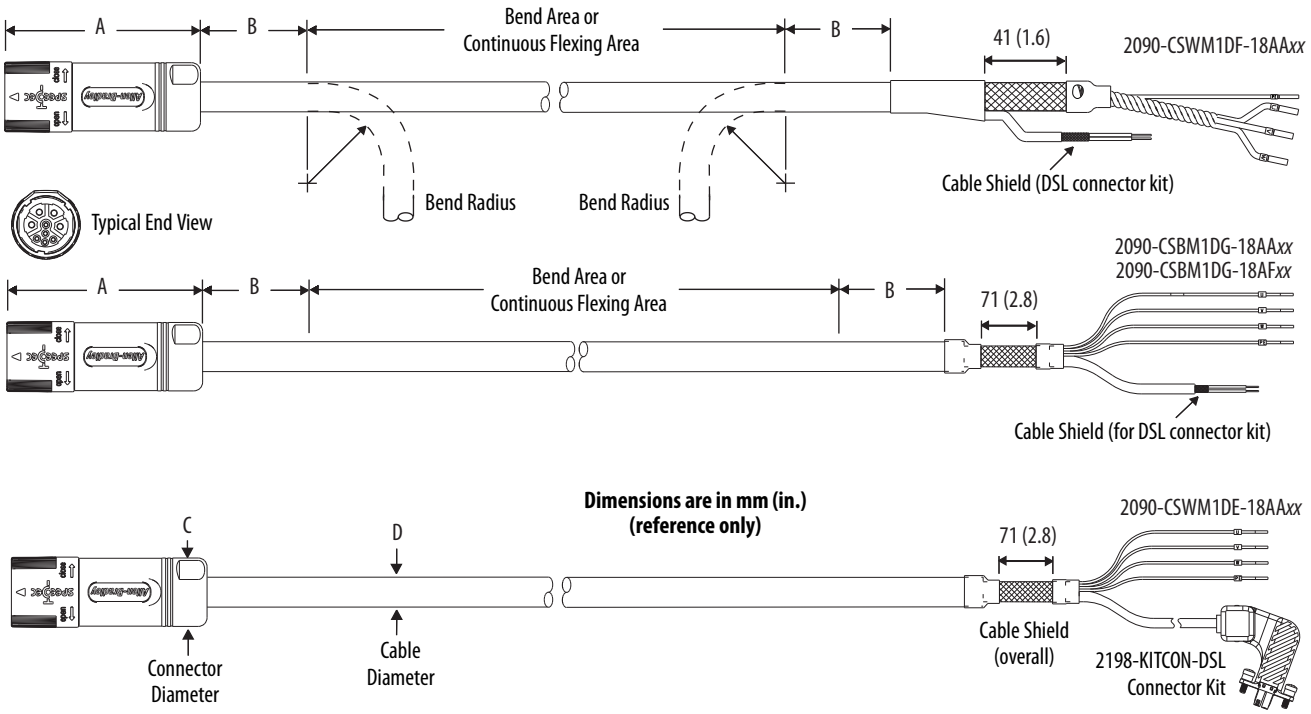

Single Motor Cable Dimensions (18 AWG)

Cable Cat. No.	A mm (in.)	B [1] mm (in.)	Continuous Bend Radius [1] mm (in.)	C mm (in.)	D mm (in.)
2090-CSBM1DF-18AA*xx* 2090-CSBM1DE-18AA*xx* 2090-CSBM1DG-18AA*xx*	81 (3.2)	105 (4.1)	N/A	28 (1.1)	15 (0.59)
2090-CSWM1DF-18AA*xx* 2090-CSWM1DE-18AA*xx* 2090-CSWM1DG-18AA*xx*					
2090-CSBM1DF-18AF*xx* 2090-CSBM1DE-18AF*xx* 2090-CSBM1DG-18AF*xx*			150 (5.9)		

(1) Dimension B and Continuous Bend Radius are based on the cable diameter. Refer to Single Cable Bend Radius Definitions on page 10 for more information.

Single Motor Cable Dimensions (14 AWG) Brake

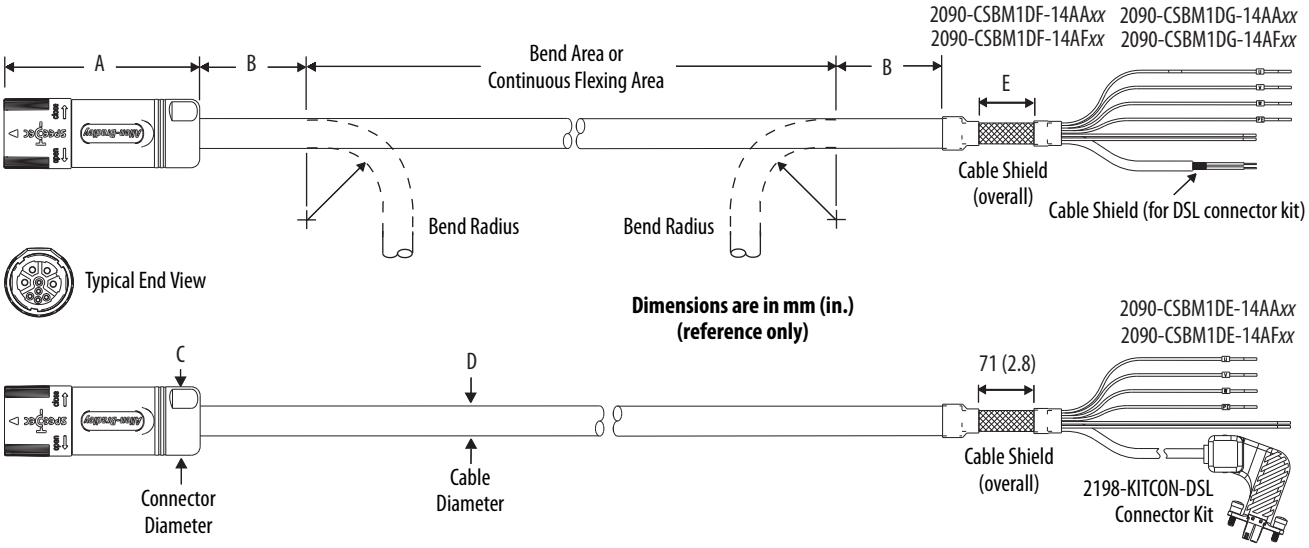

Single Motor Cable Dimensions (14 AWG) Without Brake

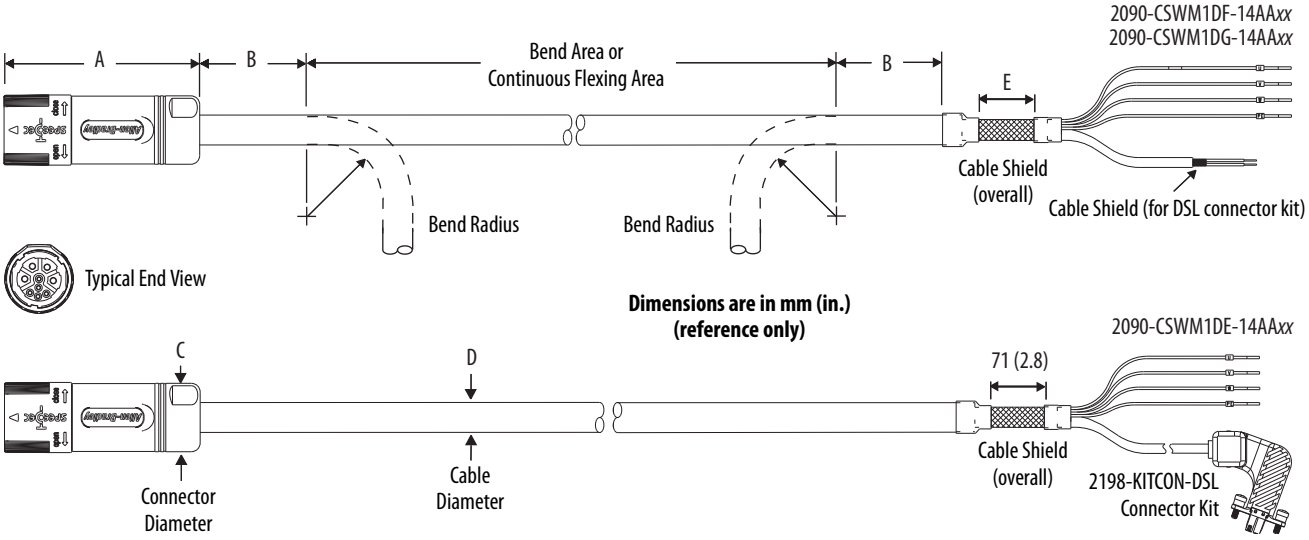

Single Motor Cable Dimensions (14 AWG)

Cable Cat. No.	A mm (in.)	B (1) mm (in.)	Continuous Bend Radius (1) mm (in.)	C mm (in.)	D mm (in.)	E mm (in.)
2090-CSBM1DF-14AA*xx*	81 (3.2)	105 (4.1)	N/A	28 (1.1)	15.0 (0.59)	41 (1.6)
2090-CSBM1DE-14AA*xx* (series A) 2090-CSBM1DE-14AA*xx* (series B)		105 (4.1) 114 (4.5)			15.0 (0.59) 16.3 (0.64)	71 (2.8)
2090-CSBM1DG-14AA*xx*		105 (4.1)			15.0 (0.59)	
2090-CSWM1DF-14AA*xx*						41 (1.6)
2090-CSWM1DE-14AA*xx* 2090-CSWM1DG-14AA*xx*						71 (2.8)
2090-CSBM1DF-14AF*xx*		119 (4.7)	170 (6.7)		17.0 (0.67)	41 (1.6)
2090-CSBM1DE-14AF*xx* (series A and B) 2090-CSBM1DG-14AF*xx*						71 (2.8)

(1) Dimension B and Continuous Bend Radius are based on the cable diameter. Refer to Single Cable Bend Radius Definitions on page 10 for more information.

Single Motor Cable Dimensions (10, 8, and 6 AWG)

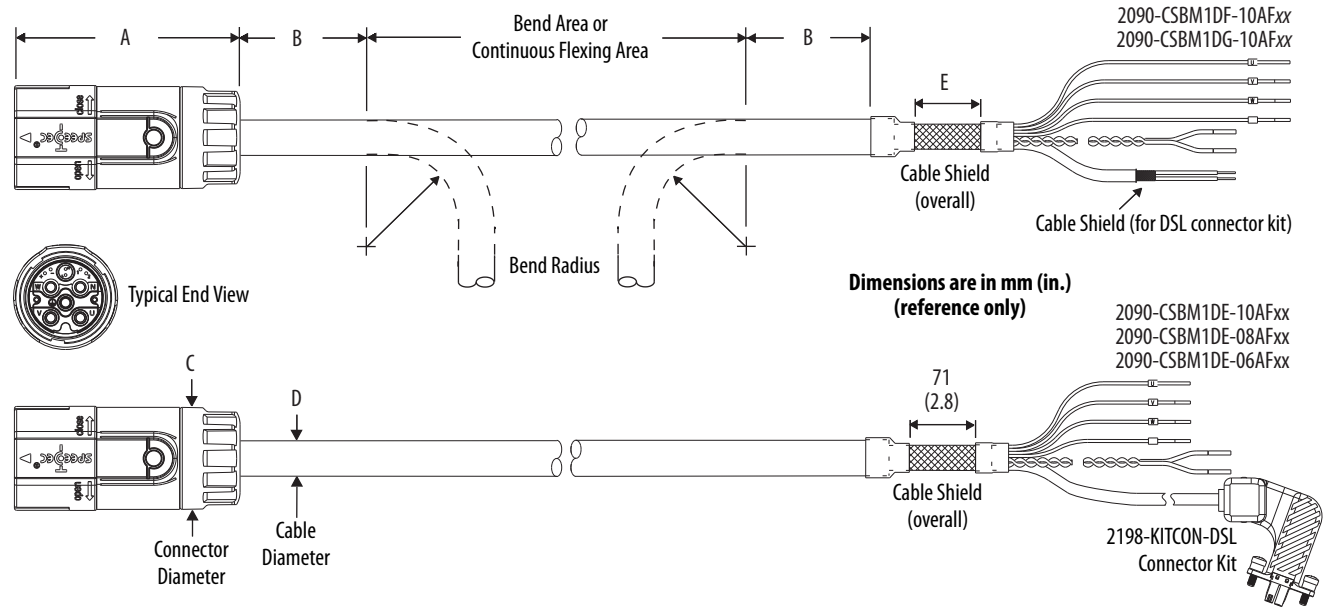

Single Motor Cable Dimensions (10, 8, and 6 AWG)

Cable Cat. No.	A mm (in.)	B [1] mm (in.)	Continuous Bend Radius [1] mm (in.)	C mm (in.)	D mm (in.)	E mm (in.)
2090-CSBM1DF-10AF*xx*	99.0 (3.9)	133 (5.2)	190 (7.5)	46.0 (1.8)	19.0 (0.75)	50.8 (2.0)
2090-CSBM1DG-10AF*xx*						71.0 (2.8)
2090-CSBM1DE-10AF*xx* (series A)						
2090-CSBM1DE-10AF*xx* (series B)		142 (5.6)	203 (8.0)		20.3 (0.80)	
2090-CSBM1DE-08AF*xx*	100 (4.0)	200 (8.0)	250 (10.0)	46.0 (1.8)	25.0 (0.98)	89 (3.5)
2090-CSBM1DE-06AF*xx*						

(1) Dimension B and Continuous Bend Radius are based on the cable diameter. Refer to Single Cable Bend Radius Definitions on page 10 for more information.

Dimensions - Single Continuous-flex Extension Cables

Extension Cable Dimensions

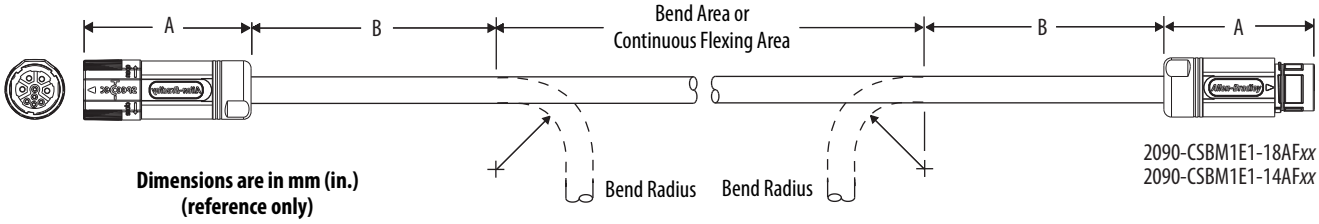

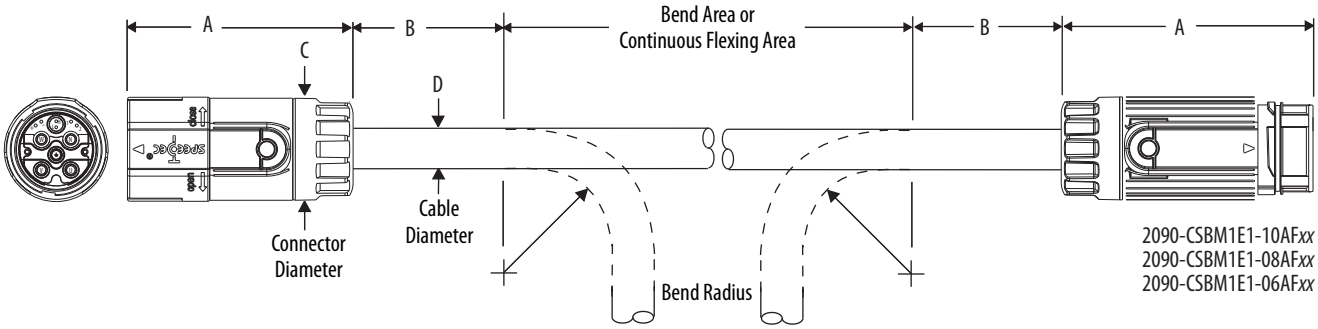

Extension Cable Dimensions

Extension Cable Cat. No.	**A** mm (in.)	**B** (1) mm (in.)	**Continuous Bend Radius** (1) mm (in.)	**C** mm (in.)	**D** mm (in.)
2090-CSBM1E1-18AF*xx*	81 (3.2)	105 (4.1)	150 (5.9)	28 (1.1)	15.0 (0.59)
2090-CSBM1E1-14AF*xx* (series A and B)	81 (3.2)	119 (4.7)	170 (6.7)	28 (1.1)	17.0 (0.67)
2090-CSBM1E1-10AF*xx* (series A) 2090-CSBM1E1-10AF*xx* (series B)	99 (3.9)	133 (5.2) 142 (5.6)	190 (7.5) 203 (8.0)	46 (1.8)	19.0 (0.75) 20.3 (0.80)
2090-CSBM1E1-08AF*xx*	100 (4.0)	200 (8.0)	250 (10.0)	46.0 (1.8)	25.0 (0.98)
2090-CSBM1E1-06AF*xx*					

(1) Dimension B and Continuous Bend Radius are based on the cable diameter. Refer to Single Cable Bend Radius Definitions on page 10 for more information.

2090-Series Power and Feedback Cables

A wide variety of power and feedback cables with rugged DIN connectors are available for connecting your motion control system. Standard (non-flex) motor power and feedback cables are available for all Allen-Bradley servo motors and actuators. Continuous-flex rated cables, intended for moving applications, are also available. Continuous-flex extension and standard (non-flex) transition cables are also available for your applications that require them.

IMPORTANT All flying-lead feedback cables require breakout components or connector kits for drive-end terminations. Refer to Breakout Components and Connector Kits beginning on page 69 for catalog numbers and descriptions.

IMPORTANT Standard (non-flex) cables have a regular maintenance and installation bend radius of 10 times the cable diameter. For flexing applications, continuous-flex cables have an operational bend radius of 12 times the cable diameter.

Catalog Numbers - 2090-Series Power and Feedback Cables

Catalog numbers consist of various characters, each of which identifies a specific option for that component. Use the catalog numbering charts below to understand the configuration of your component. For questions regarding product availability, contact your Allen-Bradley distributor.

Motor Power/Brake, Feedback, and Extension Cables

2090 - C *xx* M*x* D*x* - C*x* A*x* *xx*

Cable Length
Refer to Technical Specifications - 2090-Series Power and Feedback Cables beginning on page 35.

Cable Type
AA = Standard, non-flex
AF = Continuous-flex

Encoder Type (applies to feedback cables)
CB = Serial incremental/Serial absolute - battery backup
CC = Serial incremental/Incremental
CD = SIN/COS High-resolution/Incremental
CE = SIN/COS High-resolution/Resolver

Wire Gauge Size (applies to power cables)
16, 14, 12, 10, 8, 6, 4, and 2 AWG

Drive-end Connector Type
DF = Drive-end, flying-lead
DD = Drive-end, D-sub connector
E7 = Extension receptacle (SpeedTec ready)

Motor-end Connector Type
M6 = Circular plastic connector
M4 = Threaded DIN connector
M7 = SpeedTec DIN connector

Cable Type
PB = Motor power with brake wires
PW = Motor power only
FB = Motor feedback only

Accessory Component
C = Cable

Bulletin Number

Transition Cables

Cat. No.	Cable Gauge AWG	Cable Type	Description
2090-CPBM4E2-14TR	14 and 16	Power/brake	Threaded DIN connector (M4) on motor-end to bayonet receptacle (E2) for mating with existing bayonet cable, 500 mm (19.7 in.).
2090-CPBM4E2-10TR	10		
2090-CPBM4E2-08TR	8		
2090-CPBM4E2-04TR	4 and 6		
2090-CPWM4E2-14TR	14 and 16	Power (only)	
2090-CPWM4E2-10TR	10		
2090-CPWM4E2-08TR	8		
2090-CPWM4E2-04TR	4 and 6		
2090-CFBM4E2-CATR	N/A	Feedback	

Motor Power, Feedback, and Brake Cables

2090 - *xx x xx xx - xx* S *xx*

Cable Length
Refer to Technical Specifications - 2090-Series Power and Feedback Cables beginning on page 35.

Motor Connector
S = Straight

Wire Gauge Size (AWG)
16 = Motor power cable
18 = Motor brake cables
Blank = Feedback cables

Motor/Actuator Series
MF = Threaded DIN Connectors
MPS-A/B*xxxx* (MPS-A/B*xxxx*-M/S)
HPK-B/E*xxxx* (HPK-B/E*xxxxx*-M/S)
MPAS-A/B*xxxx* (MPAS-A/B*xxxxx*-V/A) or MPMA-A/B*xxxx*
T = TLY-A*xxxx* (TLY-A*xxxx*-B/H)

Cable Type
P = Motor power
F = Motor feedback connector (flying-leads at drive)
FC = Motor feedback (connectors at both ends, TL-Series™)
FM = Motor feedback (flying-leads to D-sub at drive)
B = Motor brake

Flex Option
N = Standard cable (non-flex)

Drive Family
DA = Kinetix 3 drives
XX = All other drives

Bulletin Number

2090-Series Power and Feedback Cables Overview

Feedback Cable Descriptions (standard, non-flex)

Standard Cable Cat. No.	Description	Cable Configuration Motor/Acutator End — Drive End	Connector Type
2090-CFBM7DF-CEAA*xx*	• Drive-end flying-leads (DF) • High-resolution or resolver applications (CE)	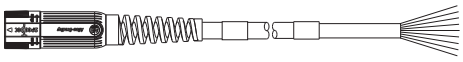	SpeedTec DIN (M7)
2090-CFBM7DD-CEAA*xx*	• Drive-end 15-pin connector (DD) • High-resolution or resolver applications (CE)	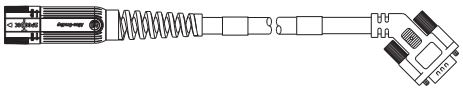	
2090-XXNFMF-S*xx*	• Drive-end flying-leads • High-resolution or incremental applications	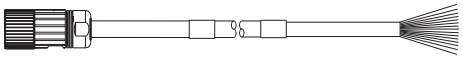	Threaded DIN (M4)
2090-CFBM4E2-CATR	• Drive-end bayonet (E2), transition (TR) cable (1) • Motor-end threaded DIN (M4) • All feedback types (CA)		
2090-CFBM6DF-CBAA*xx*	• Drive-end flying-leads (DF) • High-resolution, battery backup or Incremental applications (CB)	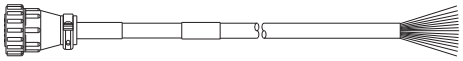	Circular Plastic (M6)
2090-CFBM6DD-CCAA*xx*	• Drive-end 15-pin connector (DD) • Incremental applications only (CC)	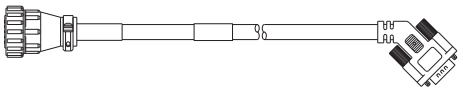	
2090-DANFCT-S*xx*	• Drive-end 20-pin connector • High-resolution applications	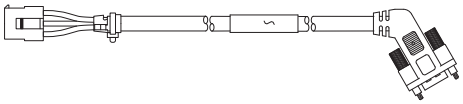	Rectangular Plastic

(1) Threaded DIN connector (motor end) and bayonet connector for 2090-XXNFMP-S*xx* cable. Refer to 2090-Series Motor Power and Feedback Transition Cables on page 21.

Feedback Cable Descriptions (continuous-flex)

Continuous-flex Cable Cat. No.	Description	Cable Configuration Motor/Acutator End — Drive End	Connector Type
2090-CFBM7DF-CDAF*xx*	• Drive-end flying-leads (DF) • High-resolution or incremental applications (CD)	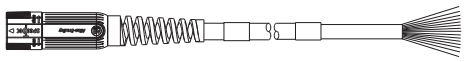	SpeedTec DIN (M7)
2090-CFBM7DF-CEAF*xx*	• Drive-end flying-leads (DF) • High-resolution or resolver applications (CE)	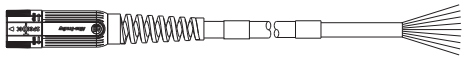	
2090-CFBM7DD-CEAF*xx*	• Drive-end 15-pin connector (DD) • High-resolution or resolver applications (CE)	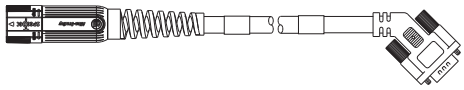	
2090-CFBM7E7-CDAF*xx* 2090-CFBM7E7-CEAF*xx*	• Drive-end (male) connector, extension (E7) (1) • Motor-end SpeedTec DIN cable plug (M7)	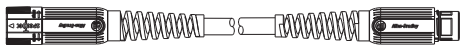	
2090-CFBM4DF-CDAF*xx*	• Drive-end flying-leads • High-resolution or incremental applications	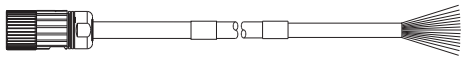	Threaded DIN (M4)

(1) SpeedTec DIN connector (motor end) and male connector for extending SpeedTec or threaded DIN cable. Refer to SpeedTec DIN Continuous-flex Extension Cables on page 20.

IMPORTANT Feedback cables with the CE designation, for example 2090-CFBM7DF-CEAA*xx*, are intended for high-resolution encoder or resolver applications and have fewer conductors than feedback cables with the CD designation, for example 2090-CFBM7DF-CDAF*xx* that are intended for high-resolution or incremental encoder applications.

Power/Brake Cable Descriptions (standard, non-flex)

Standard Cable Cat. No.	Description	Cable Configuration	Connector Type
		Motor/Acutator End — Drive End	
2090-CPBM7DF-*xx*AA*xx*	• Drive-end flying-leads (DF) • Power/brake wires (PB)		SpeedTec DIN (M7)
2090-CPWM7DF-*xx*AA*xx*	• Drive-end flying-leads (DF) • Power wires only (PW)	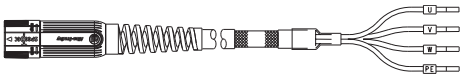	
2090-XXNPMF-*xx*S*xx*	• Drive-end flying-leads • Power/brake wires	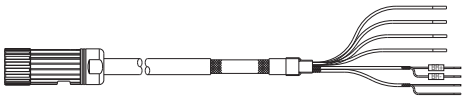	Threaded DIN (M4)
2090-CPBM4E2-*xx*TR	• Drive-end bayonet (E2), transition (TR) cable (1) • Motor-end threaded DIN (M4) • Power/brake wires (PB)	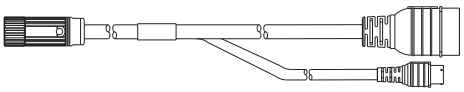	
2090-CPWM4E2-*xx*TR	• Drive-end bayonet (E2), transition (TR) cable (1) • Motor-end threaded DIN (M4) • Power wires only (PW)		
2090-CPBM6DF-16AA*xx*	• Drive-end flying-leads (DF) • Power/brake wires (PB)	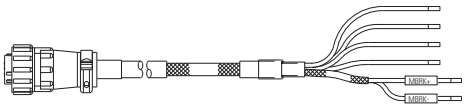	Circular Plastic (M6)
2090-CPWM6DF-16AA*xx*	• Drive-end flying-leads (DF) • Power wires only (PW)	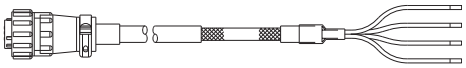	
2090-DANPT-16S*xx*	• Drive-end flying-leads • Power wires only	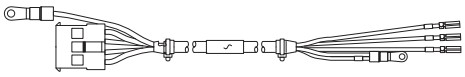	Rectangular Plastic
2090-DANBT-18S*xx*	Drive-end flying-lead brake wires	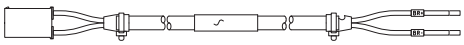	

(1) Threaded DIN connector (motor end) and bayonet connector for 2090-XXNFMP-S*xx* cable. Refer to 2090-Series Motor Power and Feedback Transition Cables on page 21.

Power/Brake Cable Descriptions (continuous-flex)

Continuous-flex Cable Cat. No.	Description	Cable Configuration	Connector Type
		Motor/Acutator End — Drive End	
2090-CPBM7DF-*xx*AF*xx*	• Drive-end flying-leads (DF) • Power/brake wires (PB)		SpeedTec DIN (M7)
2090-CPWM7DF-*xx*AF*xx*	• Drive-end flying-leads (DF) • Power wires only (PW)		
2090-CPBM7E7-*xx*AF*xx*	• Drive-end (male) connector, extension (E7) (1) • Motor-end SpeedTec DIN cable plug (M7)	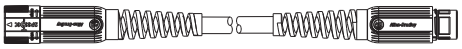	
2090-CPBM4DF-*xx*AF*xx*	• Drive-end flying-leads (DF) • Power/brake wires (PB)	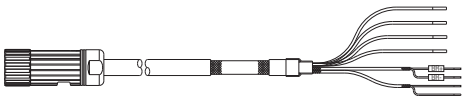	Threaded DIN (M4)
2090-CPWM4DF-*xx*AF*xx*	• Drive-end flying-leads (DF) • Power wires only (PW)	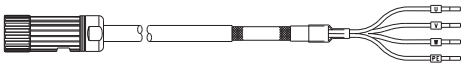	

(1) SpeedTec DIN connector (motor end) and male connector for extending SpeedTec or threaded DIN cable. Refer to SpeedTec DIN Continuous-flex Extension Cables on page 20.

2090-Series Power and Feedback Cables with SpeedTec DIN Connectors Overview

2090-Series power and feedback cables with SpeedTec DIN connectors let OEMs and end-users standardize their machines on a common motor cable family. These cables, designed by Rockwell Automation for optimal performance with Allen-Bradley servo drives, servo motors, and linear actuators, offer best-in-class features and standards compliance. Innovative features, configuration options, and accessories provide machine builders with complete control of the cable requirements in their machines.

SpeedTec DIN Cable Features

- NFPA 79 Compliant
- UL Listed bulk cable with 600V insulation rating for use in cable trays and exposed run applications.
  - Type TC-ER: Power-only and power-with-brake cables
  - Type PLTC-ER: Feedback cable optimized for high-resolution feedback motors
- CSA AWM, I/II A/B, 600V, 90 °C construction
- SpeedTec connection system yields quick connections with positive metallic keying
- DESINA compliant jacket coloring (orange for power, green for feedback) for easy identification and separation of cables in a machine
- Cables are included in the Rockwell Automation servo system Declaration of Conformity (DoC)
- Continuous flex cables are suitable for 20 million flex-cycles
  - Continuous-flex cables are also available in extension cable configurations
- Comprehensive accessories optimize the use of cables in machines

SpeedTec DIN Continuous-flex Extension Cables

Motor power and feedback extension cables provide continuous-flex cable technology between your standard (non-flex) cable and the continuous-flex application. The IP rating for continuous-flex extension cables is consistent with the motor/actuator and cable combination they are extending. Extension cables are available in lengths up to 30 m (98.4 ft). Extension power cables are available in 16, 14, 10, and 8 AWG.

Typical Extension Cable Application with Bulkhead Adapter

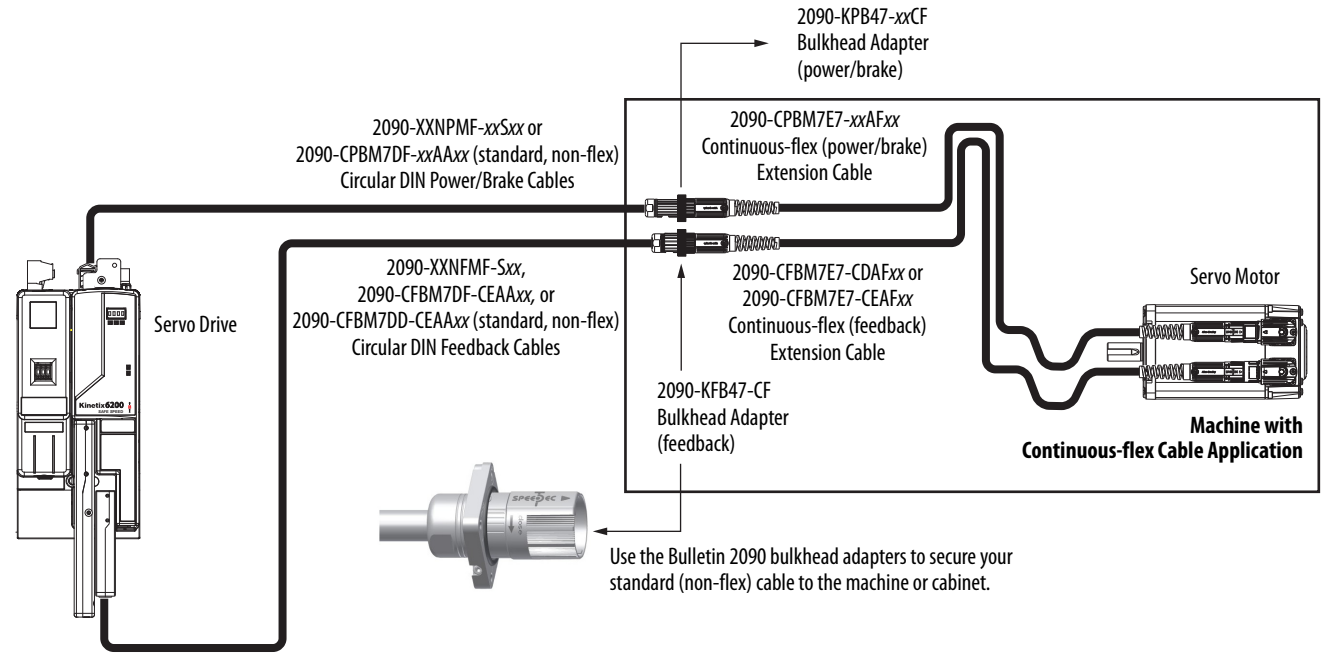

Continuous-flex Extension Feedback Cables

Continuous-flex Cable Cat. No.	Description	Applications
2090-CFBM7E7-CDAF*xx*	Feedback extension cable, SpeedTec DIN (male/female) connectors	Intended for high-resolution or incremental encoder applications.
2090-CFBM7E7-CEAF*xx*		Intended for high-resolution encoder or resolver applications.

Continuous-flex Extension Power Cables

Continuous-flex Cable Cat. No.	Description
2090-CPBM7E7-16AF*xx*	Power/brake extension cable, SpeedTec DIN (male/female) connectors
2090-CPBM7E7-14AF*xx*	
2090-CPBM7E7-10AF*xx*	
2090-CPBM7E7-08AF*xx*	

2090-Series Motor Power and Feedback Transition Cables

Motor power/brake and feedback transition cables support installations where MP-Series™ (Bulletin MPL) motors with bayonet connectors were recently replaced by the same motor with circular DIN connectors. These 0.5 m (19.7 in.) cables provide a seamless transition between your new motor and existing power, brake, and feedback cables.

TIP Brake contacts for motors with bayonet connectors are in a separate connector. Power/brake cables with circular DIN connectors (either threaded or SpeedTec) include brake contacts in the power/brake connector.

Bayonet and Circular DIN Motor Connectors

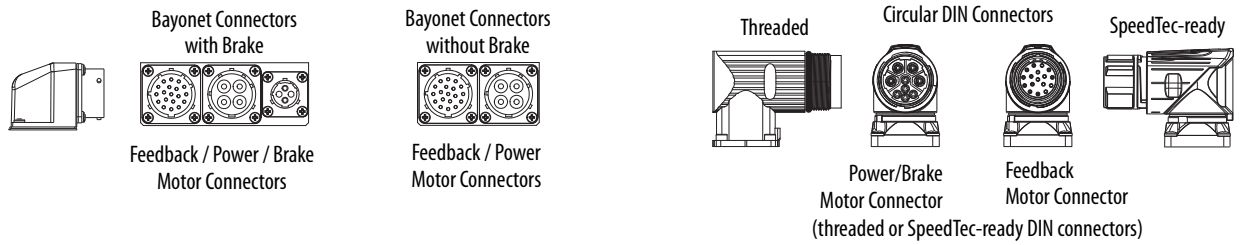

Transition Cable Application (power-only cable)

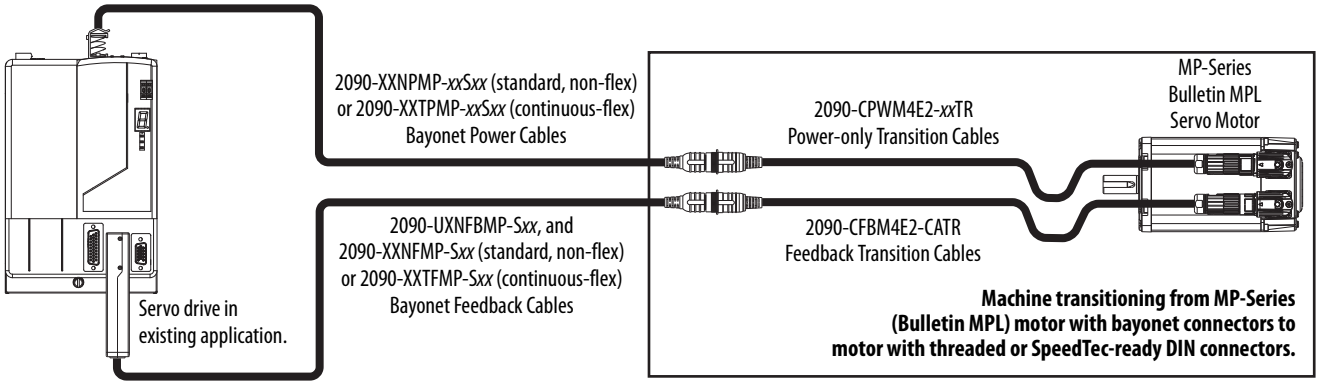

Transition Cable Application (power/brake cable)

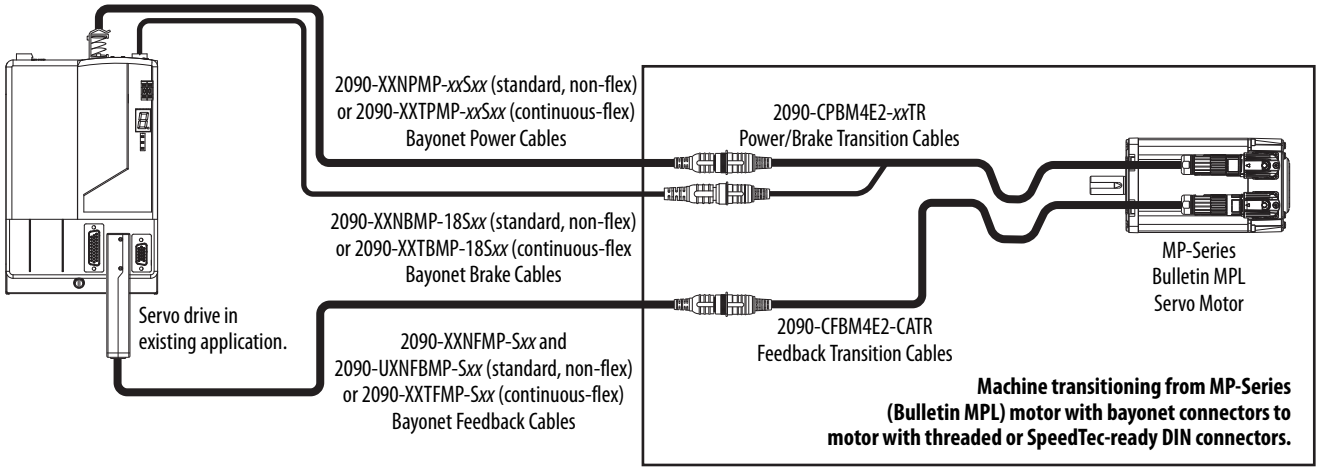

Refer to the transition cable selection tables on page 26 for cable catalog numbers for the specific Bulletin MPL or Bulletin MPM motor you are transitioning to.

Circular DIN Connector Compatibility Overview

Motors equipped with either threaded or SpeedTec circular DIN connectors are listed below. Circular DIN motor connectors rotate up to 180° and combine power and brake wires in the same connector.

Motor Connector/Cable Plug Compatibility

Motor/Actuator Cat. No.	Connector Type	Power-only or Power/Brake Cables	Feedback Cables
VPC-B*xxxxx*-Y	SpeedTec-ready DIN	2090-CP*x*M7DF-*xx*AA*xx* 2090-CP*x*M7DF-*xx*AF*xx*	2090-CFBM7DF-CEAA*xx* 2090-CFBM7DF-CEAF*xx* 2090-CFBM7DF-CDAF*xx*
VPC-B*xxxxx*-S MPL-A/B15*xxx* and MPL-A/B2*xxx* MPL-A/B3*xxx*, MPL-A/B4*xxx*, MPL-A/B45*xxx*, MPL-A/B5*xxx* MPL-B6*xxx*, MPL-B8*xxx*, and MPL-B9*xxx* MPM-A/B*xxxx* MPF-A/B*xxxx* RDB-B*xxxx* (1) LDAT-S*xxxxxx*-*x*D*x* and LDAT-S*xxxxxx*-*x*B*x* (1) MPAS-A/B*xxxx* and MPMA-A/B*xxxx* (1) MPAR-A/B*xxxxx* MPAI-A/B*xxxxx* LDC-C*xxxxxxx* and LDL-*xxxxxxx* (1)			2090-CFBM7DF-CEAA*xx* 2090-CFBM7DD-CEAA*xx* 2090-CFBM7DF-CEAF*xx* 2090-CFBM7DD-CEAF*xx* 2090-CFBM7DF-CDAF*xx*
MPS-A/B*xxxx*	SpeedTec-ready DIN with 3 m (9.8 ft) cable extensions	• M7 cable plugs • O-ring on motor connector not required • Adapts to SpeedTec-ready connectors only	
HPK-B/E*xxxxx*	SpeedTec-ready DIN	Customer supplied	2090-CFBM7DF-CEAA*xx* 2090-CFBM7DD-CEAA*xx* 2090-CFBM7DF-CEAF*xx* 2090-CFBM7DD-CEAF*xx*

(1) The LDC-Series™ and LDL-Series™ linear motors, LDAT-S*xxxxxx*-*x*B*x* linear thrusters, Bulletin MPAS and MPMA linear stages (direct-drive only), and Bulletin RDB direct-drive motors have SpeedTec-ready DIN (M7) motor connectors, but require the additional conductors included with 2090-CFBM7DF-CDAF*xx* (continuous-flex) and 2090-XXNFMF-S*xx* standard (non-flex) cables.

IMPORTANT Motors equipped with SpeedTec-ready DIN (M7) connectors are fully compatible with threaded DIN (M4) cable plugs.
- SpeedTec-ready DIN motor connectors are also compatible with SpeedTec DIN (M7/E7) extension cable plugs.
- Motors equipped with threaded DIN (M4) connectors are compatible with only threaded DIN (M4) cable plugs.

Typical Circular DIN Cable Applications

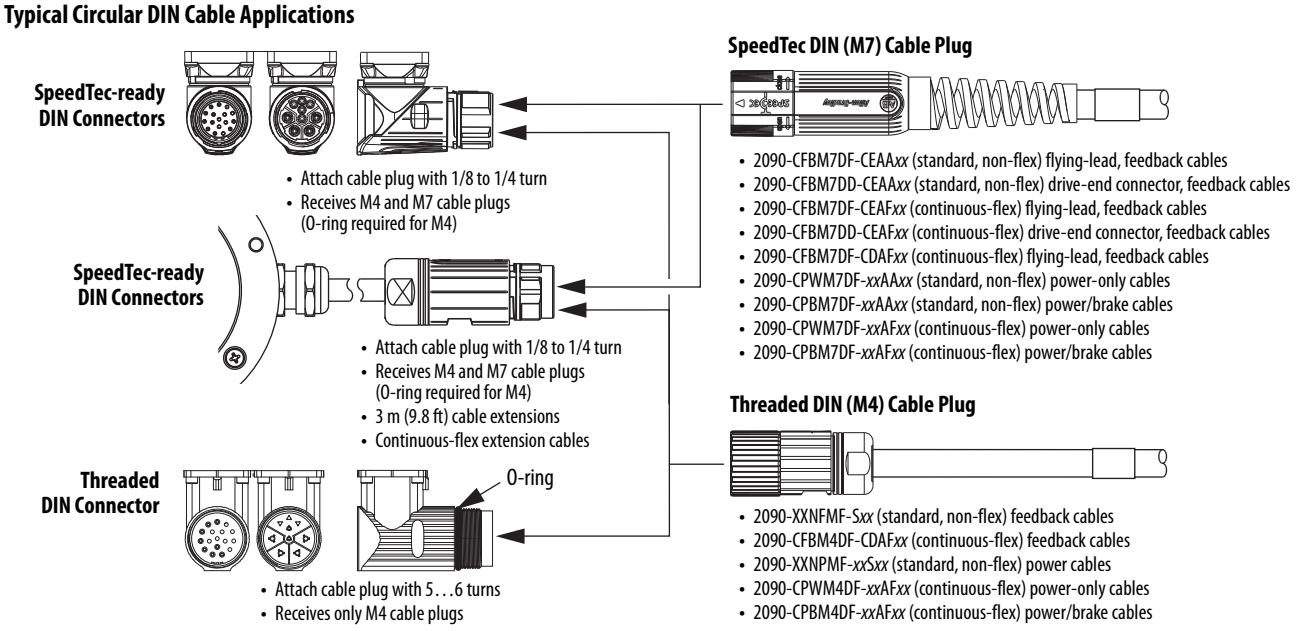

2090-Series Power and Feedback Cable Selection

These tables provide motor power and feedback cable catalog numbers for use with Allen-Bradley servo motors. Most motor brake wires are in the power cable, so a separate brake cable is not required (except where noted). The IP rating is dependent on the use of Allen-Bradley Bulletin 2090 cables as listed in these tables.

IMPORTANT Maximum motor cable length depends on the feedback type and overall system design. The drive-system power supply, AC input-power type, and AC input voltage are among the configuration variables. For more information on maximum cable lengths see your servo drive user manual or the Kinetix Servo Drives Technical Data, publication KNX-TD003.

Kinetix 5700 single-axis inverters (catalog numbers 2198-S086-ERS*x,* 2198-S130-ERS*x*, and 2198-S160-ERS*x*) are compatible with 2090-CP*x*M7DF cables that have 10, 8, 6, 4, and 2 AWG power conductors. 2198-S263-ERS*x* and 2198-S312-ERS*x* single-axis inverters are also compatible with 2090-CP*x*M7DF cables, but only 4 and 2 AWG power conductors.

Kinetix VP Continuous Duty Motors

Motor Cat. No.	Drive Compatibility (1)	Feedback Type	Feedback Cable Cat. No.	IP Rating
VPC-B*xxxxx*-S	2198-D*xxx*-ERS3 2198-D*xxx*-ERS4 or 2198-S*xxx*-ERS3 2198-S*xxx*-ERS4	Single-turn High Resolution Encoder Feedback	2090-CFBM7DF-CEAA*xx* (standard, non-flex) 2090-CFBM7DF-CEAF*xx* (continuous-flex)	Shaft seal is standard. IP65 with specified cables.
VPC-B*xxxxx*-Y		Multi-turn High Resolution Absolute Encoder Feedback		

(1) For information on maximum cable lengths see the Kinetix 5700 Servo Drives User Manual, publication 2198-UM002,

Kinetix VP (400V-class) Continuous Duty Motors	Power Cable Cat. No.	IP Rating
VPC-B1652*xx*-S/Y, VPC-B1653*xx*-S/Y	2090-CP*x*M7DF-14AA*xx* (standard, non-flex) 2090-CP*x*M7DF-14AF*xx* (continuous-flex)	Shaft seal is standard. IP65 with specified cables.
VPC-B2153*xx*-S/Y, VPC-B21549-S/Y		
VPC-B1654D-S/Y	2090-CP*x*M7DF-10AA*xx* (standard, non-flex) 2090-CP*x*M7DF-10AF*xx* (continuous-flex)	
VPC-B2154A-S/Y		
VPC-B30029-S/Y		
VPC-B2154D-S/Y, VPC-B2155D-S/Y	2090-CP*x*M7DF-08AA*xx* (standard, non-flex) 2090-CP*x*M7DF-08AF*xx* (continuous-flex)	
VPC-B3002A-S/Y, VPC-B30039-S/Y, VPC-B30049-S/Y		
VPC-B2156D-S/Y	2090-CPBM7DF-06AA*xx* (standard, non-flex)	
VPC-B3003A-S/Y		
VPC-B3004A-S/Y, VPC-B3004D-S/Y	2090-CPBM7DF-04AA*xx* (standard, non-flex)	

For cable configuration illustrations and feature descriptions, by catalog number, refer to 2090-Series Power and Feedback Cables Overview beginning on page 17.
Cable length *xx* is in meters. Refer to Technical Specifications - 2090-Series Power and Feedback Cables beginning on page 35.

IMPORTANT The MP-Series low-inertia motors on this page are equipped with DIN connectors (specified by 7 in the catalog number) and are not compatible with cables designed for motors equipped with bayonet connectors (specified by 2 in the catalog number). The motors with bayonet connectors (for example, MPL-A310P-*xx*2*x*AA) are being discontinued and require 2090-XXNFMP-S*xx* (bayonet) cables. For help with migration or to select bayonet cables, contact your Rockwell Automation sales representative.

MP-Series Low Inertia Motors

Motor Cat. No.	Drive Compatibility [1]	Feedback Type	Feedback Cable Cat. No.	IP Rating
MPL-A15*xxx*-V/E*x*7*x*AA, MPL-A2*xxx*-V/E*x*7*x*AA	2198-H*xxx*-ERS or 2198-H*xxx*-ERS2 2093-AC05-MP*x* or 2093-AM*xx* 2094-AC*xx*-M*xx*-S or 2094-AM*xx*-S 2097-V3*x*PR*x* or 2097-V3*x*PR*x*-LM	Multi-turn High-resolution Absolute or Single-turn High-resolution Encoder Feedback	2090-CFBM7DF-CEAA*xx* or 2090-CFBM7DD-CEAA*xx* (standard, non-flex) 2090-CFBM7DF-CEAF*xx* 2090-CFBM7DD-CEAF*xx* (continuous-flex)	Shaft seal is optional: IP50 without shaft seal IP66 with shaft seal
MPL-B15*xxx*-V/E*x*7*x*AA, MPL-B2*xxx*-V/E*x*7*x*AA	2198-H*xxx*-ERS or 2198-H*xxx*-ERS2 2198-D*xxx*-ERS3 or 2198-D*xxx*-ERS4 2094-BC*xx*-M*xx*-S or 2094-BM*xx*-S 2094-BC*xx*-M*xx*-M or 2094-BM*xx*-M 2097-V34PR*x* or 2097-V34PR*x*-LM			
MPL-A3*xxx*-M/S*x*7*x*AA, MPL-A4*xxx*-M/S*x*7*x*AA, MPL-A45*xxx*-M/S*x*7*x*AA, MPL-A5*xxx*-M/S*x*7*x*AA	2198-H*xxx*-ERS or 2198-H*xxx*-ERS2 2093-AC05-MP*x* or 2093-AM*xx* 2094-AC*xx*-M*xx*-S or 2094-AM*xx*-S 2097-V3*x*PR*x* or 2097-V3*x*PR*x*-LM			
MPL-B3*xxx*-M/S*x*7*x*AA, MPL-B4*xxx*-M/S*x*7*x*AA, MPL-B45*xxx*-M/S*x*7*x*AA, MPL-B5*xxx*-M/S*x*7*x*AA, MPL-B6*xxx*-M/S*x*7*x*AA, MPL-B8*xxx*-M/S*x*7*x*AA, MPL-B9*xxx*-M/S*x*7*x*AA	2198-H*xxx*-ERS or 2198-H*xxx*-ERS2 2198-*xxxx*-ERS3 or 2198-*xxxx*-ERS4 2094-BC*xx*-M*xx*-S or 2094-BM*xx*-S 2094-BC*xx*-M*xx*-M or 2094-BM*xx*-M 2097-V34PR*x* or 2097-V34PR*x*-LM 2099-BM*xx*-S			
MPL-A15*xxx*-H*x*7*x*AA, MPL-A2*xxx*-H*x*7*x*AA	2093-AC05-MP*x* or 2093-AM*xx* 2094-AC*xx*-M*xx*-S or 2094-AM*xx*-S 2097-V3*x*PR*x* or 2097-V3*x*PR*x*-LM	Incremental [2] Feedback	2090-XXNFMF-S*xx* (standard, non-flex) 2090-CFBM7DF-CDAF*xx* (continuous-flex)	Shaft seal is optional: IP50 without shaft seal IP66 with shaft seal
MPL-B15*xxx*-H*x*7*x*AA, MPL-B2*xxx*-H*x*7*x*AA	2198-D*xxx*-ERS3 or 2198-D*xxx*-ERS4 2094-BC*xx*-M*xx*-S or 2094-BM*xx*-S 2094-BC*xx*-M*xx*-M or 2094-BM*xx*-M 2097-V34PR*x* or 2097-V34PR*x*-LM			
MPL-A3*xxx*-H*x*7*x*AA, MPL-A4*xxx*-H*x*7*x*AA, MPL-A45*xxx*-H*x*7*x*AA	2093-AC05-MP*x* or 2093-AM*xx* 2094-AC*xx*-M*xx*-S or 2094-AM*xx*-S 2097-V3*x*PR*x* or 2097-V3*x*PR*x*-LM		2090-XXNFMF-S*xx* (standard, non-flex) 2090-CFBM7DF-CDAF*xx* (continuous-flex)	
MPL-B3*xxx*-H*x*7*x*AA, MPL-B4*xxx*-H*x*7*x*AA, MPL-B45*xxx*-H*x*7*x*AA	2198-D*xxx*-ERS3 or 2198-D*xxx*-ERS4 2094-BC*xx*-M*xx*-S or 2094-BM*xx*-S 2094-BC*xx*-M*xx*-M or 2094-BM*xx*-M 2097-V34PR*x* or 2097-V34PR*x*-LM			
MPL-B*xxxx*-R*x*7*x*AA	2094-BC*xx*-M*xx*-S or 2094-BM*xx*-S	Resolver Feedback [2]	2090-CFBM7DF-CEAA*xx* (standard, non-flex) 2090-CFBM7DF-CEAF*xx* (continuous-flex)	

(1) For information on maximum cable lengths see Kinetix 5700 Servo Drives User Manual, publication 2198-UM002, or Kinetix 5500 Servo Drives User Manual, publication 2198-UM001. For all other drive families, see the Kinetix Servo Drives Technical Data, publication KNX-TD003.

(2) Not all MP-Series low-inertia motors are available with incremental and resolver feedback options.

For cable configuration illustrations and feature descriptions, by catalog number, refer to 2090-Series Power and Feedback Cables Overview beginning on page 17.
Cable length *xx* is in meters. Refer to Technical Specifications - 2090-Series Power and Feedback Cables beginning on page 35.

IMPORTANT The MP-Series low-inertia motors on this page are equipped with DIN connectors (specified by 7 in the catalog number) and are not compatible with cables designed for motors equipped with bayonet connectors (specified by 2 in the catalog number). The motors with bayonet connectors (for example, MPL-A310P-*xx*2*x*AA) are being discontinued and require 2090-XXNPMP-*xx*S*xx* (bayonet) cables. For help with migration or to select bayonet cables, contact your Rockwell Automation sales representative.

MP-Series (200V-class) Low Inertia Motors	Power Cable Cat. No.	IP Rating
MPL-A15*xxx*-*xx*7*x*AA, MPL-A2*xxx*-*xx*7*x*AA	2090-CP*x*M7DF-16AA*xx* (standard, non-flex) 2090-CP*x*M7DF-16AF*xx* (continuous-flex)	Shaft seal is optional: • IP50 without shaft seal • IP66 with shaft seal
MPL-A3*xxx*-*xx*7*x*AA		
MPL-A420P-*xx*7*x*AA, MPL-A430H-*xx*7*x*AA		
MPL-A4530F-*xx*7*x*AA, MPL-A4540C-*xx*7*x*AA		
MPL-A430P-*xx*7*x*AA, MPL-A4530K-*xx*7*x*AA, MPL-A4540F-*xx*7*x*AA	2090-CP*x*M7DF-14AA*xx* (standard, non-flex) 2090-CP*x*M7DF-14AF*xx* (continuous-flex)	
MPL-A4560F-*xx*7*x*AA	2090-CP*x*M7DF-12AA*xx* (standard, non-flex)	
MPL-A520K-*xx*7*x*AA	2090-CP*x*M7DF-10AA*xx* (standard, non-flex) 2090-CP*x*M7DF-10AF*xx* (continuous-flex)	
MPL-A540K-*xx*7*x*AA, MPL-A560F-*xx*7*x*AA	2090-CP*x*M7DF-08AA*xx* (standard, non-flex) 2090-CP*x*M7DF-08AF*xx* (continuous-flex)	

MP-Series (400V-class) Low Inertia Motors	Power Cable Cat. No.	IP Rating
MPL-B15*xxx*-*xx*7*x*AA, MPL-B2*xxx*-*xx*7*x*AA	2090-CP*x*M7DF-16AA*xx* (standard, non-flex) 2090-CP*x*M7DF-16AF*xx* (continuous-flex)	Shaft seal is optional: • IP50 without shaft seal • IP66 with shaft seal
MPL-B3*xxx*-*xx*7*x*AA		
MPL-B4*xxx*-*xx*7*x*AA		
MPL-B45*xxx*-*xx*7*x*AA		
MPL-B520K-*xx*7*x*AA		
MPL-B540D-*xx*7*x*AA, MPL-B540K-*xx*7*x*AA, MPL-B560F-*xx*7*x*AA	2090-CP*x*M7DF-14AA*xx* (standard, non-flex) 2090-CP*x*M7DF-14AF*xx* (continuous-flex)	
MPL-B580F-*xx*7*x*AA, MPL-B580J-*xx*7*x*AA	2090-CP*x*M7DF-10AA*xx* (standard, non-flex) 2090-CP*x*M7DF-10AF*xx* (continuous-flex)	
MPL-B640F-*xx*7*x*AA (1)		
MPL-B660F-*xx*7*x*AA, MPL-B680D-*xx*7*x*AA, (1) MPL-B960B-*xx*7*x*AA, MPL-B980B-*xx*7*x*AA (1)	2090-CP*x*M7DF-08AA*xx* (standard, non-flex) 2090-CP*x*M7DF-08AF*xx* (continuous-flex)	
MPL-B680F-*xx*7*x*AA, MPL-B680H-*xx*7*x*AA, MPL-B860D-*xx*7*x*AA, MPL-B880C-*xx*7*x*AA,	2090-CPBM7DF-06AA*xx* (standard, non-flex)	
MPL-B880D-*xx*7*x*AA	2090-CPBM7DF-04AA*xx* (standard, non-flex)	
MPL-B960C-*xx*7*x*AA, MPL-B960D-*xx*7*x*AA, MPL-B980C-*xx*7*x*AA, MPL-B980D-*xx*7*x*AA		
MPL-B980E-*xx*7*x*AA	2090-CPBM7DF-02AA*xx* (standard, non-flex)	

(1) For applications that use these five motors (catalog numbers MPL-B*xxxx*-*xx*7**4**AA with the brake option) where the power cable length exceeds 50 m (164 ft), 2090-CPBM7DF-06AA*xx* (6 AWG) cable is required. Motors without the brake option (catalog numbers MPL-B*xxxx*-*xx*7**2**AA can use the cable size as specified in the table regardless of cable length.

For cable configuration illustrations and feature descriptions, by catalog number, refer to 2090-Series Power and Feedback Cables Overview beginning on page 17.
Cable length *xx* is in meters. Refer to Technical Specifications - 2090-Series Power and Feedback Cables beginning on page 35.

Transition Cables for MP-Series (Bulletin MPL) Motors (200V-class)

Motor Cat. No. (1)	Power-only Cable Cat. No.	Power/Brake Cable Cat. No.	Feedback Cable Cat. No.
MPL-A15*xxx* and MPL-A2*xxx*	N/A	N/A	N/A
MPL-A3*xxx*, MPL-A4*xxx*, MPL-A45*xxx*	2090-CPWM4E2-14TR	2090-CPBM4E2-14TR	2090-CFBM4E2-CATR
MPL-A5*xxx*	2090-CPWM4E2-10TR	2090-CPBM4E2-10TR	

(1) Bulletin MPL motor catalog number is transitioning from MPL-A*xxxx-xx*2*x*AA (with bayonet connectors) to MPL-A*xxxx-xx*7*x*AA (with SpeedTec DIN connectors).

Transition Cables for MP-Series (Bulletin MPL) Motors (400V-class)

Motor Cat. No. (1)	Power-only Cable Cat. No.	Power/Brake Cable Cat. No.	Feedback Cable Cat. No.
MPL-B15*xxx* and MPL-B2*xxx*	N/A	N/A	N/A
MPL-B3*xxx* MPL-B4*xxx*, MPL-B45*xxx* MPL-B520, MPL-B540, MPL-B560	2090-CPWM4E2-14TR	2090-CPBM4E2-14TR	2090-CFBM4E2-CATR
MPL-B580	2090-CPWM4E2-10TR	2090-CPBM4E2-10TR	
MPL-B6*xxx* MPL-B860D, MPL-B880C, MPL-B960B, MPL-B960C, MPL-B980B	2090-CPWM4E2-08TR	2090-CPBM4E2-08TR	
MPL-B880D, MPL-B960D, MPL-B980C, MPL-B980D	2090-CPWM4E2-04TR	2090-CPBM4E2-04TR	

(1) Bulletin MPL motor catalog number is transitioning from MPL-B*xxxx-xx*2*x*AA (with bayonet connectors) to MPL-B*xxxx-xx*7*x*AA (with SpeedTec DIN connectors).

Transition Cables for MP-Series (Bulletin MPM) Motors (200V-class)

Motor Cat. No. (1)	Power-only Cable Cat. No.	Power/Brake Cable Cat. No.	Feedback Cable Cat. No.
MPM-A115*xxx*, MPM-A1302F	2090-CPWM4E2-14TR	2090-CPBM4E2-14TR	2090-CFBM4E2-CATR
MPM-A1304F, MPM-A1651F	2090-CPWM4E2-10TR	2090-CPBM4E2-10TR	
MPM-A1652F, MPM-A1653F	2090-CPWM4E2-08TR	2090-CPBM4E2-08TR	
MPM-A2152F, MPM-A2153F MPM-A2154C, MPM-A2154E	2090-CPWM4E2-04TR	2090-CPBM4E2-04TR	

(1) Bulletin MPL motor catalog number is transitioning from MPL-A*xxxx-xx*2*x*AA (with bayonet connectors) to MPM-A*xxxx-xx*7*x*AA (with SpeedTec DIN connectors).

Transition Cables for MP-Series (Bulletin MPM) Motors (400V-class)

Motor Cat. No. (1)	Power-only Cable Cat. No.	Power/Brake Cable Cat. No.	Feedback Cable Cat. No.
MPM-B115*xxx*, MPM-B1302F, MPM-B130xx MPM-B1651C, MPM-B1651F, MPM-B1652C, MPM-B1653C	2090-CPWM4E2-14TR	2090-CPBM4E2-14TR	2090-CFBM4E2-CATR
MPM-B1651M, MPM-B1652E, MPM-B1652F, MPM-B1653E, MPM-B2152C, MPM-B2153B	2090-CPWM4E2-10TR	2090-CPBM4E2-10TR	
MPM-B1653F, MPM-B2152F, MPM-B2152M MPM-B2153E, MPM-B2153F, MPM-B2154B, MPM-B2154E, MPM-B2154F	2090-CPWM4E2-08TR	2090-CPBM4E2-08TR	

(1) Bulletin MPL motor catalog number is transitioning from MPL-B*xxxx-xx*2*x*AA (with bayonet connectors) to MPM-B*xxxx-xx*7*x*AA (with SpeedTec DIN connectors).

MP-Series Medium Inertia Motors

Motor Cat. No.	Drive Compatibility [1]	Feedback Type	Feedback Cable Cat. No.	IP Rating
MPM-A*xxxxx*-M/S	2198-H*xxx*-ERS or 2198-H*xxx*-ERS2 2093-AC05-MP*x* or 2093-AM*xx* 2094-AC*xx*-M*xx*-S or 2094-AM*xx*-S 2097-V3*x*PR*x* or 2097-V3*x*PR*x*-LM	Multi-turn High Resolution Absolute or Single-turn High Resolution Encoder Feedback	2090-CFBM7DF-CEAA*xx* or 2090-CFBM7DD-CEAA*xx* (standard, non-flex) 2090-CFBM7DF-CEAF*xx* 2090-CFBM7DD-CEAF*xx* (continuous-flex)	Shaft seal is optional: • IP50 without shaft seal • IP66/67 with shaft seal
MPM-B*xxxxx*-M/S	2198-H*xxx*-ERS or 2198-H*xxx*-ERS2 2198-*xxxx*-ERS3 or 2198-*xxxx*-ERS4 2094-BC*xx*-M*xx*-S or 2094-BM*xx*-S 2094-BC*xx*-M*xx*-M or 2094-BM*xx*-M 2097-V34PR*x* or 2097-V34PR*x*-LM 2099-BM*xx*-S			
MPM-A*xxxxx*-2	2094-AC*xx*-M*xx*-S or 2094-AM*xx*-S	Resolver Feedback [2]	2090-CFBM7DF-CEAA*xx* (standard, non-flex) 2090-CFBM7DF-CEAF*xx* (continuous-flex)	
MPM-B*xxxxx*-2	2094-BC*xx*-M*xx*-S or 2094-BM*xx*-S			

(1) For information on maximum cable lengths see Kinetix 5700 Servo Drives User Manual, publication 2198-UM002, or Kinetix 5500 Servo Drives User Manual, publication 2198-UM001. For all other drive families, see the Kinetix Servo Drives Technical Data, publication KNX-TD003.

(2) Not all MP-Series medium-inertia motors are available with the resolver feedback option.

MP-Series (200V-class) Medium Inertia Motors	Power Cable Cat. No.	IP Rating
MPM-A115*xx*	2090-CP*x*M7DF-16AA*xx* (standard, non-flex) 2090-CP*x*M7DF-16AF*xx* (continuous-flex)	Shaft seal is optional: • IP50 without shaft seal • IP66/67 with shaft seal
MPM-A1302F	2090-CP*x*M7DF-14AA*xx* (standard, non-flex) 2090-CP*x*M7DF-14AF*xx* (continuous-flex)	
MPM-A1304F	2090-CP*x*M7DF-12AA*xx* (standard, non-flex)	
MPM-A1651F	2090-CP*x*M7DF-10AA*xx* (standard, non-flex) 2090-CP*x*M7DF-10AF*xx* (continuous-flex)	
MPM-A1652F, MPM-A1653F	2090-CP*x*M7DF-08AA*xx* (standard, non-flex) 2090-CP*x*M7DF-08AF*xx* (continuous-flex)	
MPM-A215*xx*	2090-CPBM7DF-06AA*xx* (standard, non-flex)	

MP-Series (400V-class) Medium Inertia Motors	Power Cable Cat. No.	IP Rating
MPM-B1151*x*, MPM-B1152*x*	2090-CP*x*M7DF-16AA*xx* (standard, non-flex) 2090-CP*x*M7DF-16AF*xx* (continuous-flex)	Shaft seal is optional: • IP50 without shaft seal • IP66/67 with shaft seal
MPM-B1153E, MPM-B1153F		
MPM-B1302F, MPM-B1302M, MPM-B1304C, MPM-B1304E		
MPM-B1651C, MPM-B1652C		
MPM-B1153T	2090-CP*x*M7DF-14AA*xx* (standard, non-flex) 2090-CP*x*M7DF-14AF*xx* (continuous-flex)	
MPM-B1302T, MPM-B1304M		
MPM-B1651F, MPM-B1653C		
MPM-B1651M, MPM-B1652E, MPM-B1652F, MPM-B1653E	2090-CP*x*M7DF-10AA*xx* (standard, non-flex) 2090-CP*x*M7DF-10AF*xx* (continuous-flex)	
MPM-B2152C, MPM-B2153B [1]		
MPM-B1653F	2090-CP*x*M7DF-08AA*xx* (standard, non-flex) 2090-CP*x*M7DF-08AF*xx* (continuous-flex)	
MPM-B2152F, MPM-B2152M, MPM-B2153E, MPM-B2153F, [1] MPM-B2154B, MPM-B2154E, MPM-B2154F [1]		

(1) For applications that use these nine motors (catalog numbers MPM-B215*x*-*x*J**74**AA with the brake option) where the power cable length exceeds 50 m (164 ft), 2090-CPBM7DF-06AA*xx* (6 AWG) cable is required. Motors without the brake option (catalog numbers MPM-B215*x*-*x*J7**2**AA can use the cable size as specified in the table regardless of cable length.

For cable configuration illustrations and feature descriptions, by catalog number, refer to 2090-Series Power and Feedback Cables Overview beginning on page 17.

Cable length *xx* is in meters. Refer to Technical Specifications - 2090-Series Power and Feedback Cables beginning on page 35.

MP-Series Food Grade Motors

Motor Cat. No.	Drive Compatibility (1)	Feedback Type	Feedback Cable Cat. No.	IP Rating
MPF-A*xxxx*-M/S	2198-H*xxx*-ERS or 2198-H*xxx*-ERS2 2093-AC05-MP*x* or 2093-AM*xx* 2094-AC*xx*-M*xx*-S or 2094-AM*xx*-S 2097-V3*x*PR*x* or 2097-V3*x*PR*x*-LM	Multi-turn High Resolution Absolute or Single-turn High Resolution Encoder Feedback	2090-CFBM7DF-CEAA*xx* or 2090-CFBM7DD-CEAA*xx* (standard, non-flex) 2090-CFBM7DF-CEAF*xx* 2090-CFBM7DD-CEAF*xx* (continuous-flex)	Shaft seal is standard. IP66/67 with shaft seal.
MPF-B*xxxx*-M/S	2198-H*xxx*-ERS or 2198-H*xxx*-ERS2 2198-D*xxx*-ERS3 or 2198-D*xxx*-ERS4 2094-BC*xx*-M*xx*-S or 2094-BM*xx*-S 2094-BC*xx*-M*xx*-M or 2094-BM*xx*-M 2097-V34PR*x* or 2097-V34PR*x*-LM			

(1) For information on maximum cable lengths see Kinetix 5700 Servo Drives User Manual, publication 2198-UM002, or Kinetix 5500 Servo Drives User Manual, publication 2198-UM001. For all other drive families, see the Kinetix Servo Drives Technical Data, publication KNX-TD003.

MP-Series (200V-class) Food Grade Motors	Power Cable Cat. No.	IP Rating
MPF-A310P, MPF-A320H, MPF-A320P, and MPF-A330P	2090-CP*x*M7DF-16AA*xx* (standard, non-flex) 2090-CP*x*M7DF-16AF*xx* (continuous-flex)	Shaft seal is standard. IP66/67 with shaft seal.
MPF-A430H		
MPF-A430P, MPF-A4530K and MPF-A4540F	2090-CP*x*M7DF-14AA*xx* (standard, non-flex) 2090-CP*x*M7DF-14AF*xx* (continuous-flex)	
MPF-A540K	2090-CP*x*M7DF-08AA*xx* (standard, non-flex) 2090-CP*x*M7DF-08AF*xx* (continuous-flex)	

MP-Series (400V-class) Food Grade Motors	Power Cable Cat. No.	IP Rating
MPF-B310P, MPF-B320P, and MPF-B330P	2090-CP*x*M7DF-16AA*xx* (standard, non-flex) 2090-CP*x*M7DF-16AF*xx* (continuous-flex)	Shaft seal is standard. IP66/67 with shaft seal.
MPF-B430P, MPF-B4530K, and MPF-B4540F		
MPF-B540K	2090-CP*x*M7DF-10AA*xx* (standard, non-flex) 2090-CP*x*M7DF-10AF*xx* (continuous-flex)	

MP-Series Stainless Steel Motors

Motor Cat. No.	Drive Compatibility (1)	Feedback Type	Feedback Cable Cat. No.	IP Rating
MPS-A*xxxx*-M/S	2198-H*xxx*-ERS or 2198-H*xxx*-ERS2 2093-AC05-MP*x* or 2093-AM*xx* 2094-AC*xx*-M*xx*-S or 2094-AM*xx*-S 2097-V3*x*PR*x* or 2097-V3*x*PR*x*-LM	Multi-turn High Resolution Absolute or Single-turn High Resolution Encoder Feedback	2090-CFBM7DF-CEAA*xx* or 2090-CFBM7DD-CEAA*xx* (standard, non-flex) 2090-CFBM7DF-CEAF*xx* 2090-CFBM7DD-CEAF*xx* (continuous-flex)	Shaft seal is standard. IP66/67/IP69K with shaft seal and slinger.
MPS-B*xxxx*-M/S	2198-H*xxx*-ERS or 2198-H*xxx*-ERS2 2198-D*xxx*-ERS3 or 2198-D*xxx*-ERS4 2094-BC*xx*-M*xx*-S or 2094-BM*xx*-S 2094-BC*xx*-M*xx*-M or 2094-BM*xx*-M 2097-V34PR*x* or 2097-V34PR*x*-LM			

(1) For information on maximum cable lengths see Kinetix 5700 Servo Drives User Manual, publication 2198-UM002, or Kinetix 5500 Servo Drives User Manual, publication 2198-UM001. For all other drive families, see the Kinetix Servo Drives Technical Data, publication KNX-TD003.

MP-Series (200V-class) Stainless Steel Motors	Power Cable Cat. No.	IP Rating
MPS-A330P	2090-CP*x*M7DF-16AA*xx* (standard, non-flex) 2090-CP*x*M7DF-16AF*xx* (continuous-flex)	Shaft seal is standard. IP66/67/IP69K with shaft seal and slinger.
MPS-A4540F		

MP-Series (400V-class) Stainless Steel Motors	Power Cable Cat. No.	IP Rating
MPS-B330P	2090-CP*x*M7DF-16AA*xx* (standard, non-flex) 2090-CP*x*M7DF-16AF*xx* (continuous-flex)	Shaft seal is standard. IP66/67/IP69K with shaft seal and slinger.
MPS-B4540F		
MPS-B560F	2090-CP*x*M7DF-14AA*xx* (standard, non-flex) 2090-CP*x*M7DF-14AF*xx* (continuous-flex)	

For cable configuration illustrations and feature descriptions, by catalog number, refer to 2090-Series Power and Feedback Cables Overview beginning on page 17.
Cable length *xx* is in meters. Refer to Technical Specifications - 2090-Series Power and Feedback Cables beginning on page 35.

RDD-Series Direct Drive Motors

Motor Cat. No.	Drive Compatibility (1)	Feedback Type	Feedback Cable Cat. No.	IP Rating
RDB-B*xxxx*-7/3	2198-*xxxx*-ERS3 or 2198-*xxxx*-ERS4 2094-BC*xx*-M*xx*-S or 2094-BM*xx*-S 2094-BC*xx*-M*xx*-M or 2094-BM*xx*-M 2099-BM*xx*-S	Multi-turn High Resolution Absolute or Single-turn High Resolution Encoder Feedback	2090-XXNFMF-S*xx* (standard, non-flex) 2090-CFBM7DF-CDAF*xx* (continuous-flex)	Shaft seal is N/A. IP65 with specified cables.

(1) For information on maximum cable lengths see Kinetix 5700 Servo Drives User Manual, publication 2198-UM002. For all other drive families, see the Kinetix Servo Drives Technical Data, publication KNX-TD003.

RDD-Series™ (400V-class) Direct Drive Motors	Power Cable Cat. No.	IP Rating
RDB-B21519, RDB-B21529	2090-CPWM7DF-16AA*xx* (standard, non-flex) 2090-CPWM7DF-16AF*xx* (continuous-flex)	Shaft seal is N/A. IP65 with specified cables.
RDB-B29014, RDB-B29016, RDB-B29024		
RDB-B2151C, RDB-B21539	2090-CPWM7DF-14AA*xx* (standard, non-flex) 2090-CPWM7DF-14AF*xx* (continuous-flex)	
RDB-B29019, RDB-B29034		
RDB-B2152C	2090-CPWM7DF-12AA*xx* (standard, non-flex)	
RDB-B29026		
RDB-B2153C	2090-CPWM7DF-10AA*xx* (standard, non-flex) 2090-CPWM7DF-10AF*xx* (continuous-flex)	
RDB-B29036, RDB-B41014		
RDB-B29029, RDB-B41016, RDB-B41024	2090-CPWM7DF-08AA*xx* (standard, non-flex) 2090-CPWM7DF-08AF*xx* (continuous-flex)	
RDB-B29039, RDB-B41018, RDB-B41026, RDB-B41035	2090-CPBM7DF-06AA*xx* (standard, non-flex)	

For cable configuration illustrations and feature descriptions, by catalog number, refer to 2090-Series Power and Feedback Cables Overview beginning on page 17.
Cable length *xx* is in meters. Refer to Technical Specifications - 2090-Series Power and Feedback Cables beginning on page 35.

HPK-Series Asynchronous Servo Motors

Cat. No.	Drive Compatibility (1)	Feedback Type	Feedback Cable Cat. No.	IP Rating
HPK-B*xxxxx*-M/S HPK-E*xxxxx*-M/S	2198-S*xxx*-ERS3 2198-S*xxx*-ERS4 2099-BM*xx*-S	Multi-turn High Resolution Absolute or Single-turn High Resolution Encoder Feedback	2090-CFBM7DF-CEAA*xx* or 2090-CFBM7DD-CEAA*xx* (standard, non-flex) 2090-CFBM7DF-CEAF*xx* 2090-CFBM7DD-CEAF*xx* (continuous-flex)	Shaft seal is N/A. IP65 with specified cables.

(1) For information on maximum cable lengths see Kinetix 5700 Servo Drives User Manual, publication 2198-UM002. For all other drive families, see the Kinetix Servo Drives Technical Data, publication KNX-TD003.

HPK-Series™ Asynchronous Servo Motors	Power Cable Cat. No.
All HPK-B*xxxx* or HPK-E*xxxx* motors	Customer Supplied

For cable configuration illustrations and feature descriptions, by catalog number, refer to 2090-Series Power and Feedback Cables Overview beginning on page 17.
Cable length *xx* is in meters. Refer to Technical Specifications - 2090-Series Power and Feedback Cables beginning on page 35.

TL-Series Low Inertia Motors

Cat. No.	Drive Compatibility (1)	Feedback Type	Feedback Cable Cat. No.	IP Rating
TLY-A*xxxx*-H	2093-AC05-MP*x* or 2093-AM*xx* 2094-AC*xx*-M*xx*-S or 2094-AM*xx*-S 2097-V3*x*PR*x* or 2097-V3*x*PR*x*-LM	Incremental	2090-CFBM6DF-CBAA*xx* (flying lead) or 2090-CFBM6DD-CCAA*xx* (premolded connector)	Shaft seal is optional: • IP54 without shaft seal • IP65 with shaft seal Cable connectors IP30
	2071-A*xx*		2090-CFBM6DF-CBAA*xx* (flying lead)	
TLY-A*xxxx*-B	2093-AC05-MP*x* or 2093-AM*xx* 2097-V3*x*PR*x* or 2097-V3*x*PR*x*-LM	Multi-turn High Resolution Absolute Encoder Feedback	2090-CFBM6DF-CBAA*xx* (flying lead) or 2090-CFBM6DD-CCAA*xx* (premolded connector)	
	2071-A*xx*		2090-CFBM6DF-CBAA*xx* (flying lead)	
TL-A*xxxx*-B	2071-A*xx*		2090-DANFCT-S*xx* (2)	

(1) For information on maximum cable lengths see the Kinetix Servo Drives Technical Data, publication KNX-TD003.

(2) Use when high-resolution absolute encoder feedback is not required. For high-resolution encoder applications, remove the drive-side connector and wire flying leads to the 2071-TBMF connector kit with customer-supplied 3.6V lithium battery.

TL-Series (200V-class) Motors	Power Cable Cat. No.	IP Rating
TLY-A*xxxx*-H	2090-CPBM6DF-16AA*xx* (power and brake)	Shaft seal is optional: • IP54 without shaft seal • IP65 with shaft seal Cable connectors IP30
TLY-A*xxxx*-B	2090-CPWM6DF-16AA*xx* (power without brake)	
TL-A*xxxx*-B	2090-DANPT-16S*xx*	

TL-Series (200V-class) Motors	Brake Cable Cat. No.	IP Rating
TL-A*xxxx*-B motors	2090-DANBT-18S*xx*	Shaft seal is optional: • IP54 without shaft seal • IP65 with shaft seal Cable connectors IP30

For cable configuration illustrations and feature descriptions, by catalog number, refer to 2090-Series Power and Feedback Cables Overview beginning on page 17.
Cable length *xx* is in meters. Refer to Technical Specifications - 2090-Series Power and Feedback Cables beginning on page 35.
For N-Series retrofit cable information, refer to the Kinetix Rotary Motion Technical Data, publication KNX-TD001.

IMPORTANT TL-A*xxxx*-B motors have rectangular plastic connectors and are intended for use with Kinetix 3 (Bulletin 2071) servo drives. The TLY-A*xxxx* motors have circular plastic connectors and are intended for use with Bulletin 2093, 2094, and 2097 (200V-class) servo drives.

MP-Series Integrated Linear Stages

Actuator Cat. No.	Drive Compatibility (1)	Feedback Type	Feedback Cable Cat. No.	IP Rating
MPAS-A*xxxxx*-V*xx*S*x*A (ball screw) MPMA-A (ball screw)	2198-H*xxx*-ERS or 2198-H*xxx*-ERS2 2093-AC05-MP*x* or 2093-AM*xx* 2094-AC*xx*-M*xx*-S or 2094-AM*xx*-S 2097-V3*x*PR*x* 2097-V34PR*x*-LM	Multi-turn High Resolution Absolute Encoder Feedback	2090-CFBM7DF-CEAA*xx* or 2090-CFBM7DD-CEAA*xx* (standard, non-flex) 2090-CFBM7DF-CEAF*xx* 2090-CFBM7DD-CEAF*xx* (continuous-flex)	IP30
MPAS-A*xxxxx*-ALM*x*2C (direct drive) MPMA-A (direct drive)	2093-AC05-MP*x* or 2093-AM*xx* 2094-AC*xx*-M*xx*-S or 2094-AM*xx*-S 2097-V3*x*PR*x* 2071-A*xx*	Incremental Encoder Feedback	2090-XXNFMF-S*xx* (standard, non-flex) 2090-CFBM7DF-CDAF*xx* (continuous-flex)	
MPAS-B*xxxxx*-V*xx*S*x*A (ball screw) MPMA-B (ball screw)	2198-H*xxx*-ERS or 2198-H*xxx*-ERS2 2198-D*xxx*-ERS3 or 2198-D*xxx*-ERS4 2094-BC*xx*-M*xx*-S or 2094-BM*xx*-S 2094-BC*xx*-M*xx*-M or 2094-BM*xx*-M 2097-V3*x*PR*x* 2097-V34PR*x*-LM	Multi-turn High Resolution Absolute Encoder Feedback	2090-CFBM7DF-CEAA*xx* or 2090-CFBM7DD-CEAA*xx* (standard, non-flex) 2090-CFBM7DF-CEAF*xx* 2090-CFBM7DD-CEAF*xx* (continuous-flex)	
MPAS-B*xxxxx*-ALM*x*2C (direct drive) MPMA-B (direct drive)	2198-D*xxx*-ERS3 or 2198-D*xxx*-ERS4 2094-BC*xx*-M*xx*-S or 2094-BM*xx*-S 2094-BC*xx*-M*xx*-M or 2094-BM*xx*-M 2097-V3*x*PR*x*	Incremental Encoder Feedback	2090-XXNFMF-S*xx* (standard, non-flex) 2090-CFBM7DF-CDAF*xx* (continuous-flex)	

(1) For information on maximum cable lengths see Kinetix 5700 Servo Drives User Manual, publication 2198-UM002, or Kinetix 5500 Servo Drives User Manual, publication 2198-UM001. For all other drive families, see the Kinetix Servo Drives Technical Data, publication KNX-TD003.

MP-Series (200V-class) Integrated Linear Stages	Power Cable Cat. No.	IP Rating
MPAS-A*xxxxx*-V*xx*S*x*A (ball screw) or MPMA-A	2090-CP*x*M7DF-16AA*xx* (standard, non-flex) 2090-CP*x*M7DF-16AF*xx* (continuous-flex)	IP30
MPAS-A*xxxxx*-ALM*x*2C (direct drive) or MPMA-A	2090-CPWM7DF-16AA*xx* (standard, non-flex) 2090-CPWM7DF-16AF*xx* (continuous-flex)	

MP-Series (400V-class) Integrated Linear Stages	Power Cable Cat. No.	IP Rating
MPAS-B*xxxxx*-V*xx*S*x*A (ball screw) or MPMA-B	2090-CP*x*M7DF-16AA*xx* (standard, non-flex) 2090-CP*x*M7DF-16AF*xx* (continuous-flex)	IP30
MPAS-B*xxxxx*-ALM*x*2C (direct drive) or MPMA-B	2090-CPWM7DF-16AA*xx* (standard, non-flex) 2090-CPWM7DF-16AF*xx* (continuous-flex)	

For cable configuration illustrations and feature descriptions, by catalog number, refer to 2090-Series Power and Feedback Cables Overview beginning on page 17.
Cable length *xx* is in meters. Refer to Technical Specifications - 2090-Series Power and Feedback Cables beginning on page 35.

LDAT-Series Integrated Linear Thrusters

Actuator Cat. No.	Drive Compatibility (1)	Feedback Type	Feedback Cable Cat. No.	IP Rating
LDAT-S*xxxxxx*-*x*D*x* (230V operation)	2198-H*xxx*-ERS or 2198-H*xxx*-ERS2 2097-V3*x*PR*x*	Absolute Linear Encoder Feedback	2090-CFBM7DF-CEAA*xx* or 2090-CFBM7DD-CEAA*xx* (standard, non-flex) 2090-CFBM7DF-CEAF*xx* 2090-CFBM7DD-CEAF*xx* (continuous-flex)	IP30
LDAT-S*xxxxxx*-*x*D*x* (460V operation)	2198-H*xxx*-ERS or 2198-H*xxx*-ERS2 2198-D*xxx*-ERS3 or 2198-D*xxx*-ERS4 2097-V34PR*x*			
LDAT-S*xxxxxx*-*x*B*x* (230V operation)	2093-AC05-MP*x* or 2093-AM*xx* 2094-AC*xx*-M*xx*-S or 2094-AM*xx*-S 2097-V3*x*PR*x* 2071-A*xx*	Incremental Encoder Feedback	2090-XXNFMF-S*xx* (standard, non-flex) 2090-CFBM7DF-CDAF*xx* (continuous-flex)	
LDAT-S*xxxxxx*-*x*B*x* (460V operation)	2198-D*xxx*-ERS3 or 2198-D*xxx*-ERS4 2094-BC*xx*-M*xx*-S or 2094-BM*xx*-S 2094-BC*xx*-M*xx*-M or 2094-BM*xx*-M 2097-V34PR*x*			

(1) For information on maximum cable lengths see Kinetix 5700 Servo Drives User Manual, publication 2198-UM002, or Kinetix 5500 Servo Drives User Manual, publication 2198-UM001. For all other drive families, see the Kinetix Servo Drives Technical Data, publication KNX-TD003.

LDAT-Series (230V or 460V operation) Linear Thrusters	Power Cable Cat. No.	IP Rating
LDAT-S031*xxx*, LDAT-S032*xxx*, LDAT-S033*xxx*	2090-CPWM7DF-16AA*xx* (standard, non-flex) 2090-CPWM7DF-16AF*xx* (continuous-flex)	IP30
LDAT-S051*xxx*, LDAT-S052*xxx*, LDAT-S053*xxx*, LDAT-S054*xxx*		
LDAT-S072*xxx*, LDAT-S073*xxx*, LDAT-S074*xxx*, LDAT-S076*xxx*-E*xx*		
LDAT-S102*xxx*, LDAT-S103*xxx*, LDAT-S104*xxx*, LDAT-S106*xxx*-E*xx*		
LDAT-S152*xxx*, LDAT-S153*xxx*, LDAT-S154*xxx*, LDAT-S156*xxx*-E*xx*		
LDAT-S076*xxx*-D*xx*	2090-CPWM7DF-14AA*xx* (standard, non-flex) 2090-CPWM7DF-14AF*xx* (continuous-flex)	
LDAT-S106*xxx*-D*xx*		
LDAT-S156*xxx*-D*xx*		

For cable configuration illustrations and feature descriptions, by catalog number, refer to 2090-Series Power and Feedback Cables Overview beginning on page 17.
Cable length *xx* is in meters. Refer to Technical Specifications - 2090-Series Power and Feedback Cables beginning on page 35.

MP-Series Electric Cylinders

Actuator Cat. No.	Drive Compatibility (1)	Feedback Type	Feedback Cable Cat. No.	IP Rating
MPAR-A1*xxxx* MPAR-A2*xxxx* MPAR-A3*xxxx*	2198-H*xxx*-ERS or 2198-H*xxx*-ERS2 2093-AC05-MP*x* or 2093-AM*xx* 2094-AC*xx*-M*xx*-S or 2094-AM*xx*-S 2097-V3*x*PR*x* or 2097-V3*x*PR*x*-LM	Multi-turn High Resolution Absolute Encoder Feedback	2090-CFBM7DF-CEAA*xx* or 2090-CFBM7DD-CEAA*xx* (standard, non-flex) 2090-CFBM7DF-CEAF*xx* or 2090-CFBM7DD-CEAF*xx* (continuous-flex)	IP40 (1) IP66 (2)
MPAR-B1*xxxx* MPAR-B2*xxxx* MPAR-B3*xxxx*	2198-H*xxx*-ERS or 2198-H*xxx*-ERS2 2198-D*xxx*-ERS3 or 2198-D*xxx*-ERS4 2094-BC*xx*-M*xx*-S or 2094-BM*xx*-S 2094-BC*xx*-M*xx*-M or 2094-BM*xx*-M 2097-V34PR*x* or 2097-V34PR*x*-LM			

(1) For information on maximum cable lengths see Kinetix 5700 Servo Drives User Manual, publication 2198-UM002, or Kinetix 5500 Servo Drives User Manual, publication 2198-UM001. For all other drive families, see the Kinetix Servo Drives Technical Data, publication KNX-TD003.

MP-Series (200V-class) Electric Cylinders	Power Cable Cat. No.	IP Rating
MPAR-A1*xxxx* MPAR-A2*xxxx* MPAR-A3*xxxx*	2090-CP*x*M7DF-16AA*xx* (standard, non-flex) 2090-CP*x*M7DF-16AF*xx* (continuous-flex)	IP40 (1) IP66 (2)

MP-Series (400V-class) Electric Cylinders	Power Cable Cat. No.	IP Rating
MPAR-B1*xxxx* MPAR-B2*xxxx* MPAR-B3*xxxx*	2090-CP*x*M7DF-16AA*xx* (standard, non-flex) 2090-CP*x*M7DF-16AF*xx* (continuous-flex)	IP40 (1) IP66 (2)

(1) Applies to complete unit, including rod-end seal and breather port.
(2) Applies to electronic components.

MP-Series Heavy Duty Electric Cylinders

Actuator Cat. No.	Drive Compatibility (1)	Feedback Type	Feedback Cable Cat. No.	IP Rating
MPAI-A2*xxxx* MPAI-A3*xxxx* MPAI-A4*xxxx* MPAI-A5*xxxx*	2198-H*xxx*-ERS or 2198-H*xxx*-ERS2 2093-AC05-MP*x* or 2093-AM*xx* 2094-AC*xx*-M*xx*-S or 2094-AM*xx*-S 2097-V3*x*PR*x* or 2097-V3*x*PR*x*-LM	Multi-turn High Resolution Absolute Encoder Feedback	2090-CFBM7DF-CEAA*xx* or 2090-CFBM7DD-CEAA*xx* (standard, non-flex) 2090-CFBM7DF-CEAF*xx* or 2090-CFBM7DD-CEAF*xx* (continuous-flex)	IP67 (with specified cables)
MPAI-B2*xxxx* MPAI-B3*xxxx* MPAI-B4*xxxx* MPAI-B5*xxxx*	2198-H*xxx*-ERS or 2198-H*xxx*-ERS2 2198-D*xxx*-ERS3 or 2198-D*xxx*-ERS4 2094-BC*xx*-M*xx*-S or 2094-BM*xx*-S 2094-BC*xx*-M*xx*-M or 2094-BM*xx*-M 2097-V34PR*x* or 2097-V34PR*x*-LM			

(1) For information on maximum cable lengths see Kinetix 5700 Servo Drives User Manual, publication 2198-UM002, or Kinetix 5500 Servo Drives User Manual, publication 2198-UM001. For all other drive families, see the Kinetix Servo Drives Technical Data, publication KNX-TD003.

MP-Series (200V-class) Heavy Duty Electric Cylinders	Power Cable Cat. No.	IP Rating
MPAI-A2*xxxx*, MPAI-A3*xxxx*, MPAI-A4*xxxx*	2090-CP*x*M7DF-16AA*xx* (standard, non-flex) 2090-CP*x*M7DF-16AF*xx* (continuous-flex)	IP67 (with specified cables)
MPAI-A5*xxxx*	2090-CP*x*M7DF-14AA*xx* (standard, non-flex) 2090-CP*x*M7DF-14AF*xx* (continuous-flex)	

MP-Series (400V-class) Heavy Duty Electric Cylinders	Power Cable Cat. No.	IP Rating
MPAI-B2*xxxx*, MPAI-B3*xxxx*, MPAI-B4*xxxx*, MPAI-B5*xxxx*	2090-CP*x*M7DF-16AA*xx* (standard, non-flex) 2090-CP*x*M7DF-16AF*xx* (continuous-flex)	IP67 (with specified cables)

For cable configuration illustrations and feature descriptions, by catalog number, refer to 2090-Series Power and Feedback Cables Overview beginning on page 17.
Cable length *xx* is in meters. Refer to Technical Specifications - 2090-Series Power and Feedback Cables beginning on page 35.

LDC-Series Linear Motors

Cat. No.	Drive Compatibility (1)	Feedback Type	Feedback Cable Cat. No.	IP Rating
LDC-C*xxxxxx*-*xx*T*x*1 (230V operation)	2093-AC05-MP*x* or 2093-AM*xx* 2094-AC*xx*-M*xx*-S or 2094-AM*xx*-S 2097-V3*x*PR*x* 2071-A*xx*	Sin/Cos or TTL Encoder Feedback	2090-XXNFMF-S*xx* (standard, non-flex) 2090-CFBM7DF-CDAF*xx* (continuous-flex)	IP65
LDC-C*xxxxxx*-*xx*T*x*1 (460V operation)	2198-D*xxx*-ERS3 or 2198-D*xxx*-ERS4 2094-BC*xx*-M*xx*-S or 2094-BM*xx*-S 2094-BC*xx*-M*xx*-M or 2094-BM*xx*-M 2097-V34PR*x*			

(1) For information on maximum cable lengths see Kinetix 5700 Servo Drives User Manual, publication 2198-UM002. For all other drive families, see the Kinetix Servo Drives Technical Data, publication KNX-TD003.

LDC-Series (230V or 460V operation) Linear Motors	Power Cable Cat. No.	IP Rating
LDC-C*xxxxxx*-*xx*T*x*1	2090-CPWM7DF-16AA*xx* (standard, non-flex) 2090-CPWM7DF-16AF*xx* (continuous-flex)	IP65

For cable configuration illustrations and feature descriptions, by catalog number, refer to 2090-Series Power and Feedback Cables Overview beginning on page 17.
Cable length *xx* is in meters. Refer to Technical Specifications - 2090-Series Power and Feedback Cables beginning on page 35.

LDL-Series Linear Motors

Cat. No.	Drive Compatibility (1)	Feedback Type	Feedback Cable Cat. No.	IP Rating
LDL-*xxxxxxx*-*xx*T*x*1	2093-AC05-MP*x* or 2093-AM*xx* 2094-AC*xx*-M*xx*-S or 2094-AM*xx*-S 2097-V3*x*PR*x* 2071-A*xx*	Sin/Cos or TTL Encoder Feedback	2090-XXNFMF-S*xx* (standard, non-flex) 2090-CFBM7DF-CDAF*xx* (continuous-flex)	IP65

(1) For information on maximum cable lengths see the Kinetix Servo Drives Technical Data, publication KNX-TD003.

LDL-Series Linear Motors	Power Cable Cat. No.	IP Rating
LDL-*xxxxxxx*-*xx*T*x*1	2090-CPWM7DF-16AA*xx* (standard, non-flex) 2090-CPWM7DF-16AF*xx* (continuous-flex)	IP65

For cable configuration illustrations and feature descriptions, by catalog number, refer to 2090-Series Power and Feedback Cables Overview beginning on page 17.
Cable length *xx* is in meters. Refer to Technical Specifications - 2090-Series Power and Feedback Cables beginning on page 35.

Technical Specifications - 2090-Series Power and Feedback Cables

IMPORTANT Maximum motor cable length depends on the feedback type and overall system design. The drive-system power supply, AC input-power type, and AC input voltage are among the configuration variables. For more information on maximum cable lengths see your servo drive user manual or the Kinetix Servo Drives Technical Data, publication KNX-TD003.

Power Cable Specifications

Power Cables (1) Cat. No.	Cable Type/ Jacket Color	Description	Wire Size AWG	Weight, approx kg/m (lb/ft)	Standard Cable Lengths m (ft)
2090-XXNPMF-16S*xx*	Standard (non-flex) cable, Industrial TPE, Black	Four conductor, 600V, shielded cable for three-phase power with additional four conductors, 18 AWG, shielded, for motor brake and spares.	16	0.276 (0.186)	01 (3.2) 02 (6.5) 03 (9.8) 04 (13.1) 05 (16.4) 07 (22.9) 09 (29.5) 12 (39.4) 15 (49.2) 20 (65.6) 25 (82.0) 30 (98.4) 40 (131.2) 60 (196.8) 90 (295.3)
2090-XXNPMF-14S*xx*			14	0.315 (0.212)	
2090-CPBM7DF-16AA*xx*	Standard (non-flex) cable, Industrial TPE, Orange (DESINA, RAL 2003)	Four conductor, 600V, shielded cable for three-phase power with additional two conductors 18 AWG for motor brake.	16	0.212 (0.143)	
2090-CPBM7DF-14AA*xx*			14	0.261 (0.175)	
2090-CPBM7DF-12AA*xx*			12	0.349 (0.235)	
2090-CPBM7DF-10AA*xx*			10	0.492 (0.331)	
2090-CPBM7DF-08AA*xx*			8	0.708 (0.476)	
2090-CPBM7DF-06AA*xx*			6	1.038 (0.698)	
2090-CPBM7DF-04AA*xx* (2)		Four conductor, 600V, shielded cable for three-phase power with additional two conductors 16 AWG for motor brake.	4	1.549 (1.041)	
2090-CPBM7DF-02AA*xx* (2)			2	2.166 (1.455)	
2090-CPWM7DF-16AA*xx*		Four conductor, 600V, shielded cable for three-phase power.	16	0.136 (0.091)	
2090-CPWM7DF-14AA*xx*			14	0.185 (0.124)	
2090-CPWM7DF-12AA*xx*			12	0.248 (0.167)	
2090-CPWM7DF-10AA*xx*			10	0.418 (0.281)	
2090-CPWM7DF-08AA*xx*			8	0.644 (0.433)	
2090-CPWM6DF-16AA*xx*	Standard (non-flex) cable, Industrial TPE, Black		16	0.138 (0.093)	01 (3.2) 02 (6.5) 03 (9.8) 04 (13.1) 05 (16.4) 07 (22.9) 09 (29.5) 12 (39.4) 15 (49.2) 20 (65.6) 25 (82.0) 30 (98.4)
2090-DANPT-16S*xx*			16		
2090-CPBM6DF-16AA*xx*		Four conductor, 600V, shielded cable for three-phase power with additional two conductors 18 AWG for motor brake.	16	0.180 (0.121)	
2090-CPBM4DF-16AF*xx*	Continuous-flex cable Industrial TPE, Orange (DESINA, RAL 2003)		16	0.228 (0.153)	01 (3.2) 02 (6.5) 03 (9.8) 04 (13.1) 05 (16.4) 07 (22.9) 09 (29.5) 12 (39.4) 15 (49.2) 20 (65.6) 25 (82.0) 30 (98.4) 40 (131.2) 50 (164.0) 60 (196.8) 75 (264.0) 90 (295.3)
2090-CPBM7DF-16AF*xx*			16		
2090-CPBM7DF-14AF*xx*			14	0.289 (0.194)	
2090-CPBM7DF-10AF*xx*			10	0.513 (0.345)	
2090-CPBM7DF-08AF*xx*			8	0.697 (0.468)	
2090-CPWM4DF-16AF*xx*		Four conductor, 600V, shielded cable for three-phase power.	16	0.154 (0.104)	
2090-CPWM7DF-16AF*xx*			16		
2090-CPWM7DF-14AF*xx*			14	0.196 (0.132)	
2090-CPWM7DF-10AF*xx*			10	0.452 (0.304)	
2090-CPWM7DF-08AF*xx*			8	0.666 (0.448)	

(1) 2090-CP*x*M4DF-*xx*A*xxx* and 2090-CP*x*M7DF-*xx*A*xxx* power cables are UL Listed, bulk cable, type TC-ER.

(2) For this cable, the 01 and 02 m (3.2 and 6.5 ft) standard lengths do not apply.

Brake Cable Specifications

Brake Cables Cat. No.	Cable Type/ Jacket Color	Description	Wire Size AWG	Weight, approx kg/m (lb/ft)	Standard Cable Lengths m (ft)		
2090-DANBT-18S*xx*	Standard (non-flex) cable, Industrial TPE, Black	Two conductor, 600V, 18 AWG, shielded cable for motor brake.	18	0.070 (0.047)	01 (3.2) 02 (6.5) 03 (9.8) 04 (13.1)	05 (16.4) 07 (22.9) 09 (29.5) 12 (39.4)	15 (49.2) 20 (65.6) 25 (82.0) 30 (98.4)

Feedback Cable Specifications

Feedback Cables (1) (2) Cat. No.	Cable Type/ Jacket Color	Description	Wire Size AWG	Weight, approx kg/m (lb/ft)	Standard Cable Lengths m (ft)		
2090-XXNFMF-S*xx*	Standard (non-flex) cable, Industrial TPE, Black	Threaded DIN connector (motor end) to flying leads (drive end), 30V.	28 Feedback 16 Power, 5V 22 Power, 9V	0.120 (1.35)	01 (3.2) 02 (6.5) 03 (9.8) 04 (13.1) 05 (16.4)	07 (22.9) 09 (29.5) 12 (39.4) 15 (49.2) 20 (65.6)	25 (82.0) 30 (98.4) 40 (131.2) 60 (196.8) 90 (295.3)
2090-CFBM7DD-CEAA*xx*	Standard (non-flex) cable, Industrial TPE, Green (DESINA, RAL 6018)	SpeedTec DIN connector (motor end) to premolded connector (drive end), 600V.	22 All conductors	0.136 (0.092)			
2090-CFBM7DF-CEAA*xx*		SpeedTec DIN connector (motor end) to flying leads (drive end), 600V.					
2090-UXNFM-S*xx* (3)	Standard (non-flex) cable, Industrial TPE, Black	Flying-leads (motor end) to premolded connector (drive end), 30V.	28 Feedback 16 Power, 5V 22 Power, 9V	0.120 (1.35)	01 (3.2) 03 (9.8) 09 (29.5)	15 (49.2) 30 (98.4)	
2090-CFBM6DF-CBAA*xx*		Circular plastic connector (motor end) to flying leads (drive end), 300V.	28 Feedback 16 Power, 5V 22 BAT+		01 (3.2) 02 (6.5) 03 (9.8) 04 (13.1)	05 (16.4) 07 (22.9) 09 (29.5) 12 (39.4)	15 (49.2) 20 (65.6) 25 (82.0) 30 (98.4)
2090-CFBM6DD-CCAA*xx*		Circular plastic connector (motor end) to premolded connector (drive end), 300V.	28 Feedback 16 Power, 5V				
2090-DANFCT-S*xx*		Rectangular plastic connector (motor end) to premolded connector (drive end), 30V.	28 Feedback 16 Power, 5V 22 BAT+	0.130 (0.088)			
2090-CFBM4DF-CDAF*xx*	Continuous-flex cable Industrial TPE, Green (DESINA, RAL 6018)	Threaded DIN connector (motor end) to flying leads (drive end), 600V.	26 Feedback 16 Power, 5V 22 Power, 9V	0.177 (0.119)	01 (3.2) 02 (6.5) 03 (9.8) 04 (13.1) 05 (16.4) 07 (22.9)	09 (29.5) 12 (39.4) 15 (49.2) 20 (65.6) 25 (82.0) 30 (98.4)	40 (131.2) 50 (164.0) 60 (196.8) 75 (264.0) 90 (295.3)
2090-CFBM7DF-CDAF*xx*		SpeedTec DIN connector (motor end) to flying leads (drive end), 600V.					
2090-CFBM7DF-CEAF*xx*			22 All conductors	0.143 (0.096)			
2090-CFBM7DD-CEAF*xx*		SpeedTec DIN connector (motor end) to premolded connector (drive end), 600V.					

(1) 2090-CFBM7*xx*-CEA*xxx* feedback cables are UL Listed, bulk cable, type PLTC-ER.
(2) 2090-CFBM4DF-CDA*xxx* and 2090-CFBM7*xx*-CDA*xxx* feedback cables are UL Listed, bulk cable, type CM.
(3) Use with 2090-KFBM4-CAAA (threaded) or 2090-KFBM7-CAAA (SpeedTec) DIN connector kit.

Continuous-flex Extension Cable Specifications

Extension Cable (1) (2) Cat. No.	Cable Type/ Jacket Color	Description	Weight, approx kg/m (lb/ft)	Standard Cable Lengths m (ft)
2090-CPBM7E7-16AF*xx*	Power with brake Industrial TPE, Orange (DESINA, RAL 2003)	SpeedTec DIN connector plug on motor end to SpeedTec DIN receptacle for mating with 2090-Series standard, non-flex power/brake cable, 600V.	0.228 (0.153)	01 (3.2) 05 (16.4) 15 (49.2) 02 (6.5) 07 (22.9) 20 (65.6) 03 (9.8) 09 (29.5) 25 (82.0) 04 (13.1) 12 (39.4) 30 (98.4)
2090-CPBM7E7-14AF*xx*			0.289 (0.194)	
2090-CPBM7E7-10AF*xx*			0.513 (0.345)	
2090-CPBM7E7-08AF*xx*			0.697 (0.468)	
2090-CFBM7E7-CDAF*xx*	Feedback Industrial TPE, Green (DESINA, RAL 6018)	SpeedTec DIN connector plug on motor end to SpeedTec DIN receptacle for mating with 2090-Series standard, non-flex feedback cable, 600V.	0.153 (0.103)	
2090-CFBM7E7-CEAF*xx*			0.143 (0.096)	

(1) 2090-CPBM7E7-*xx*AF*xx* extension power cables are UL Listed, bulk cable, type TC-ER.
(2) 2090-CFBM7E7-CDAF*xx* extension feedback cables are UL Listed, bulk cable, type CM.
2090-CFBM7E7-CEAF*xx* extension feedback cables are UL Listed, bulk cable, type PLTC-ER.

Power and Feedback Transition Cable Specifications

Transition Cable Cat. No.	Cable Gauge AWG	Cable Type/ Jacket Color	Description	Standard Cable Lengths mm (in.)
2090-CPBM4E2-14TR	14 and 16	Power with brake Industrial TPE, Black	Threaded DIN connector on motor end to bayonet receptacle for mating with existing bayonet cable, 600V.	500 (19.7)
2090-CPBM4E2-10TR	10			
2090-CPBM4E2-08TR	8			
2090-CPBM4E2-04TR	4 and 6			
2090-CPWM4E2-14TR	14 and 16	Power (only) Industrial TPE, Black		
2090-CPWM4E2-10TR	10			
2090-CPWM4E2-08TR	8			
2090-CPWM4E2-04TR	4 and 6			
2090-CFBM4E2-CATR	N/A	Feedback Industrial TPE, Black	Threaded DIN connector on motor end to bayonet receptacle for mating with existing bayonet cable, 300V.	

Dimensions - Motor Power and Feedback Cables

When installing cable runs between the motor and drive, be careful not to stress the cable by making bends too sharp. Refer to the table below for bend radius definitions, and the dimension diagrams that follow, when routing cables during system installation.

Motor Power and Feedback Cable Bend Radius Definitions

Type of Bend Radius	Type of Cable	Description
Static bend radius	Standard (non-flex)	The static (installation) bend radius and dimension B are 7 times the cable diameter: • Do not begin a static bend inside dimension B. • Use this measurement when routing the cable in a non-flex application between motor and drive (the bend area). – The bend area is where standard (non-flex) or continuous-flex cables can be bent to their specified bend radius.
	Continuous flex	
Continuous bend radius	Continuous flex	The continuous bend radius for Bulletin 2090 motor power and feedback cables is 12 times the cable diameter: • Secure the continuous-flexing area, at least 7 cable diameters (dimension B) from each end of the cable, with a rigid mount that helps prevent the cable from flexing where it connects to the motor or shield clamp. • Use this measurement when routing the cable in a continuous-flex application between motor and drive (the continuous-flexing area). – The continuous flexing area is where continuous-flex cables can be flexed repeatedly.

Motor Power Cables

Power Cable Dimensions, Standard, Non-flex (SpeedTec DIN connector)

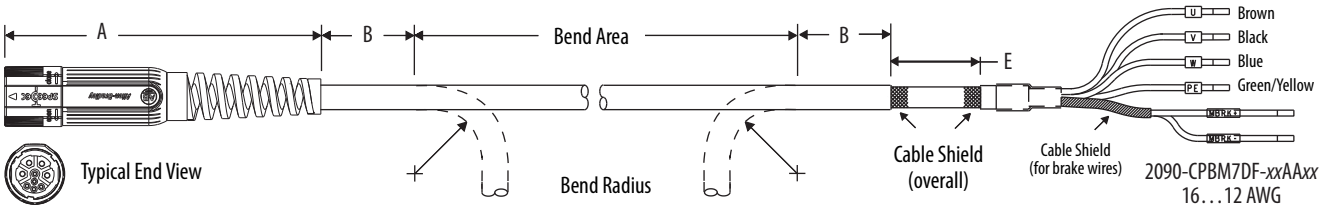

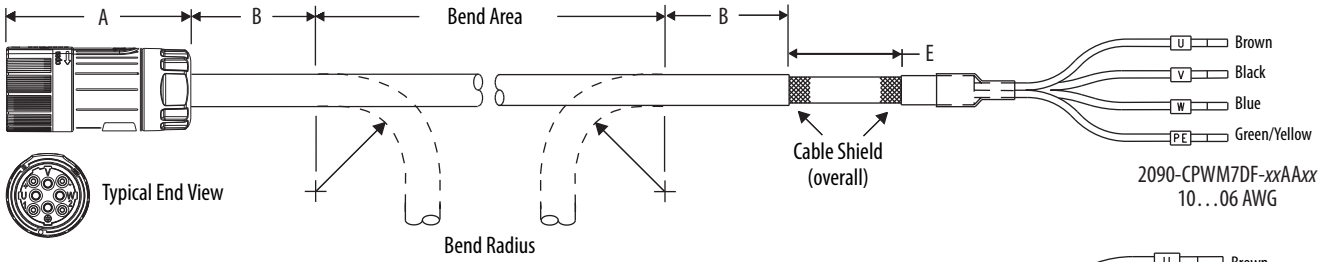

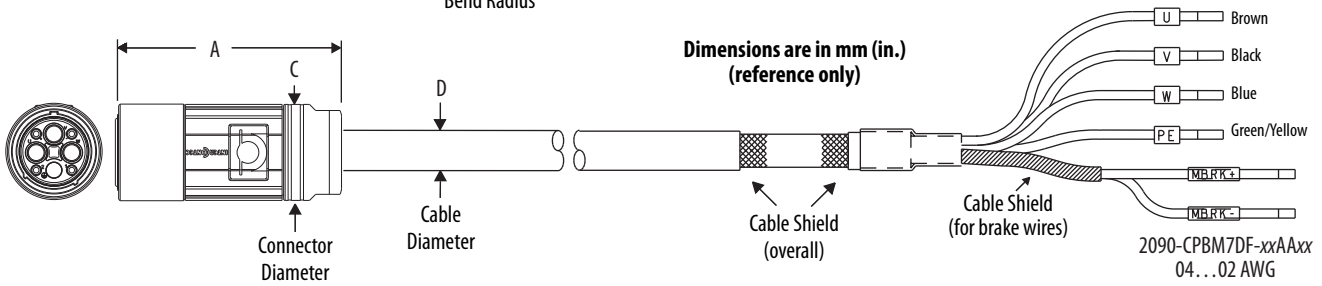

Power Cable Dimensions (standard, non-flex)

Power Cable Cat. No.	A mm (in.)	B [1] mm (in.)	C mm (in.)	D mm (in.)	E mm (in.)
2090-CPBM7DF-16AA*xx*	147 (5.8)	81.2 (3.2)	28 (1.1)	11.6 (0.46)	150 (5.9)
2090-CPWM7DF-16AA*xx*		64.4 (2.5)		9.2 (0.36)	
2090-CPBM7DF-14AA*xx*		88.9 (3.5)		12.7 (0.50)	
2090-CPWM7DF-14AA*xx*		72.1 (2.8)		10.3 (0.40)	
2090-CPBM7DF-12AA*xx*	80 (3.15)	100 (3.9)		14.3 (0.56)	
2090-CPWM7DF-12AA*xx*		78.4 (3.1)		11.2 (0.44)	
2090-CPBM7DF-10AA*xx*	100 (3.9)	118 (4.6)	46 (1.8)	16.8 (0.66)	90 (3.5)
2090-CPWM7DF-10AA*xx*		107 (4.2)		15.3 (0.60)	
2090-CPBM7DF-08AA*xx*		141 (5.5)		20.1 (0.79)	
2090-CPWM7DF-08AA*xx*		131 (5.2)		18.7 (0.74)	
2090-CPBM7DF-06AA*xx*		170 (6.7)		24.3 (0.96)	
2090-CPBM7DF-04AA*xx*	150 (5.9)	202 (7.9)	64 (2.5)	28.8 (1.13)	
2090-CPBM7DF-02AA*xx*		229 (9.0)		32.7 (1.29)	

(1) Dimension B is based on the cable diameter. Refer to Motor Power and Feedback Cable Bend Radius Definitions on page 37 for more information.

Power Cable Dimensions, Continuous-flex (SpeedTec DIN connector)

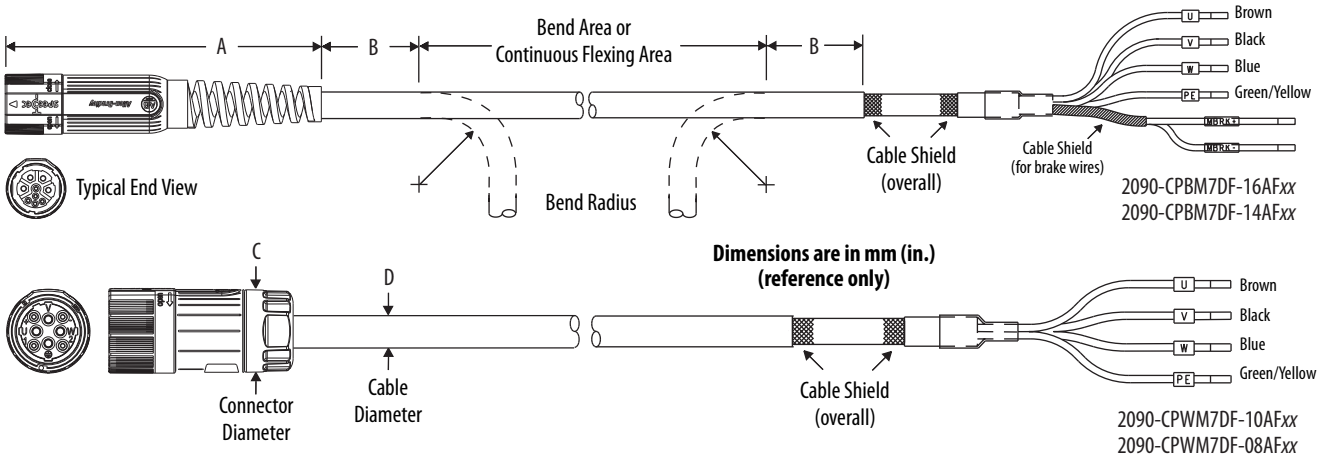

Power Cable Dimensions (continuous-flex rated)

Power Cable Cat. No.	**A** mm (in.)	**B** (1) mm (in.)	**Continuous Bend Radius** (1) mm (in.)	**C** mm (in.)	**D** mm (in.)	**E** mm (in.)
2090-CPBM7DF-16AF*xx*	147 (5.8)	87.5 (3.4)	150 (5.9)	28 (1.1)	12.5 (0.49)	150 (5.9)
2090-CPWM7DF-16AF*xx*		67.9 (2.7)	116 (4.6)		9.7 (0.38)	
2090-CPBM7DF-14AF*xx*		95.9 (3.8)	164 (6.5)		13.7 (0.54)	
2090-CPWM7DF-14AF*xx*		72.8 (2.9)	125 (4.9)		10.4 (0.41)	
2090-CPBM7DF-10AF*xx*	100 (3.9)	125 (4.9)	214 (8.4)	46 (1.8)	17.8 (0.70)	90 (3.5)
2090-CPWM7DF-10AF*xx*		110 (4.3)	188 (7.4)		15.7 (0.62)	
2090-CPBM7DF-08AF*xx*		144 (5.7)	247 (9.7)		20.6 (0.81)	
2090-CPWM7DF-08AF*xx*		141 (5.5)	242 (9.5)		20.2 (0.79)	

(1) Dimension B and Continuous Bend Radius are based on the cable diameter. Refer to Motor Power and Feedback Cable Bend Radius Definitions on page 37 for more information.

Power Cable Dimensions (threaded DIN connector)

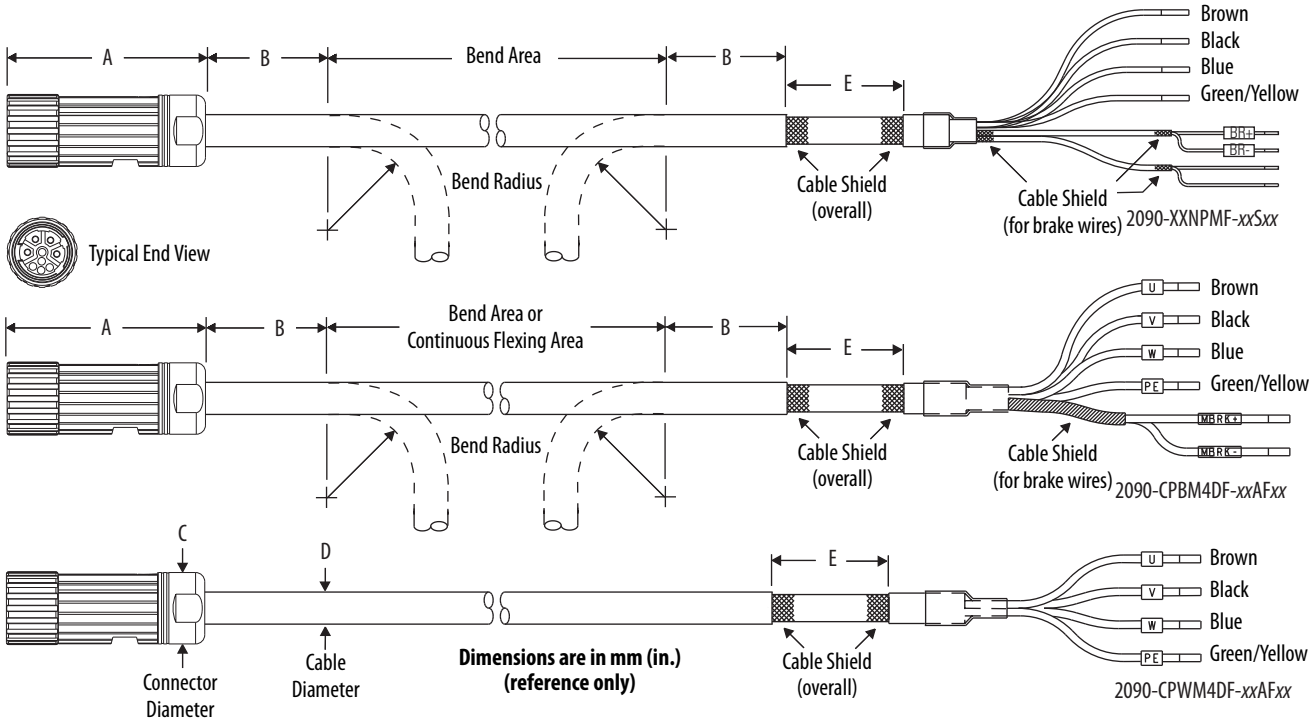

Power Cable Dimensions (standard, non-flex)

Power Cable Cat. No.	A mm (in.)	B (1) mm (in.)	C mm (in.)	D mm (in.)	E mm (in.)
2090-XXNPMF-16S*xx*	75 (2.9)	98.0 (3.8)	28.0 (1.1)	14.0 (0.55)	150 (5.9)
2090-XXNPMF-14S*xx*		105 (4.1)		15.0 (0.59)	90.0 (3.5)
2090-XXNPMF-10S*xx*	96 (3.8)	133 (5.2)	46.0 (1.8)	19.0 (0.75)	

(1) Dimension B is based on the cable diameter. Refer to Motor Power and Feedback Cable Bend Radius Definitions on page 37 for more information.

Power Cable Dimensions (continuous-flex rated)

Power Cable Cat. No.	A mm (in.)	B (1) mm (in.)	Continuous Bend Radius (1) mm (in.)	C mm (in.)	D mm (in.)	E mm (in.)
2090-CPBM4DF-16AF*xx*	75 (2.9)	87.5 (3.4)	150 (5.9)	28.0 (1.1)	12.5 (0.49)	150 (5.9)
2090-CPWM4DF-16AF*xx*		67.9 (2.7)	116 (4.6)		9.7 (0.38)	

(1) Dimension B and Continuous Bend Radius are based on the cable diameter. Refer to Motor Power and Feedback Cable Bend Radius Definitions on page 37 for more information.

Power Cable Dimensions (catalog number 2090-CP*x*M6DF-16AA*xx*)

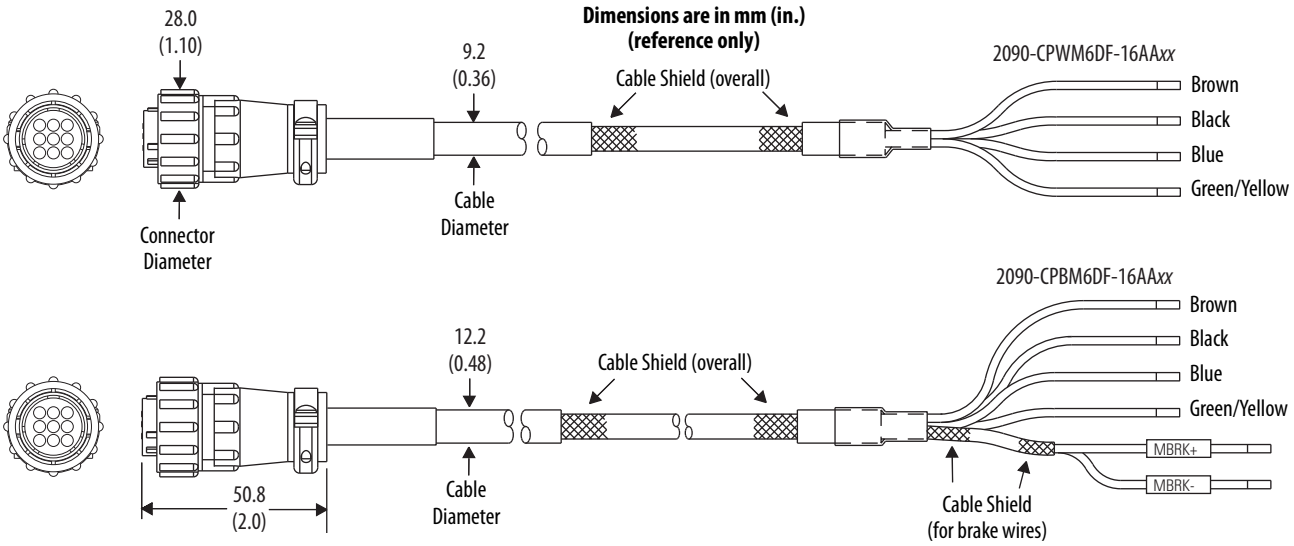

Power Cable Dimensions (catalog number 2090-DANPT-16S*xx*)

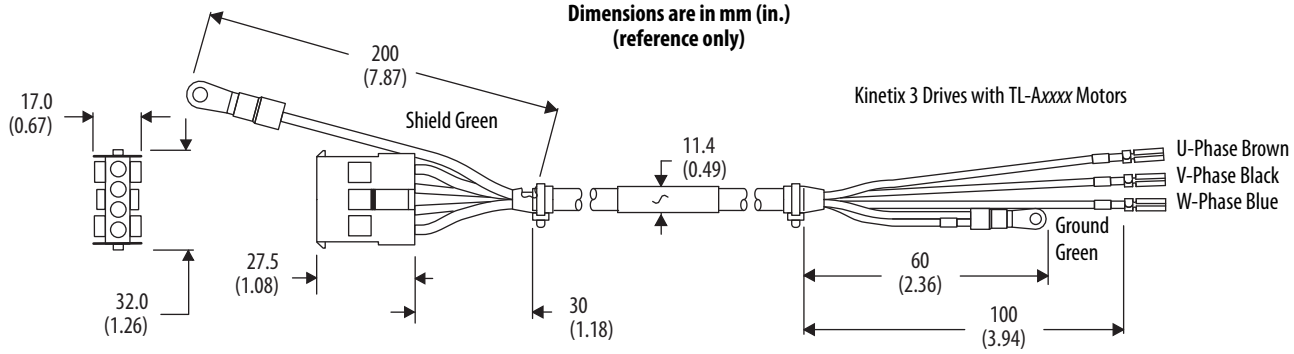

Motor Feedback Cables

Feedback Cable Dimensions (SpeedTec DIN connector)

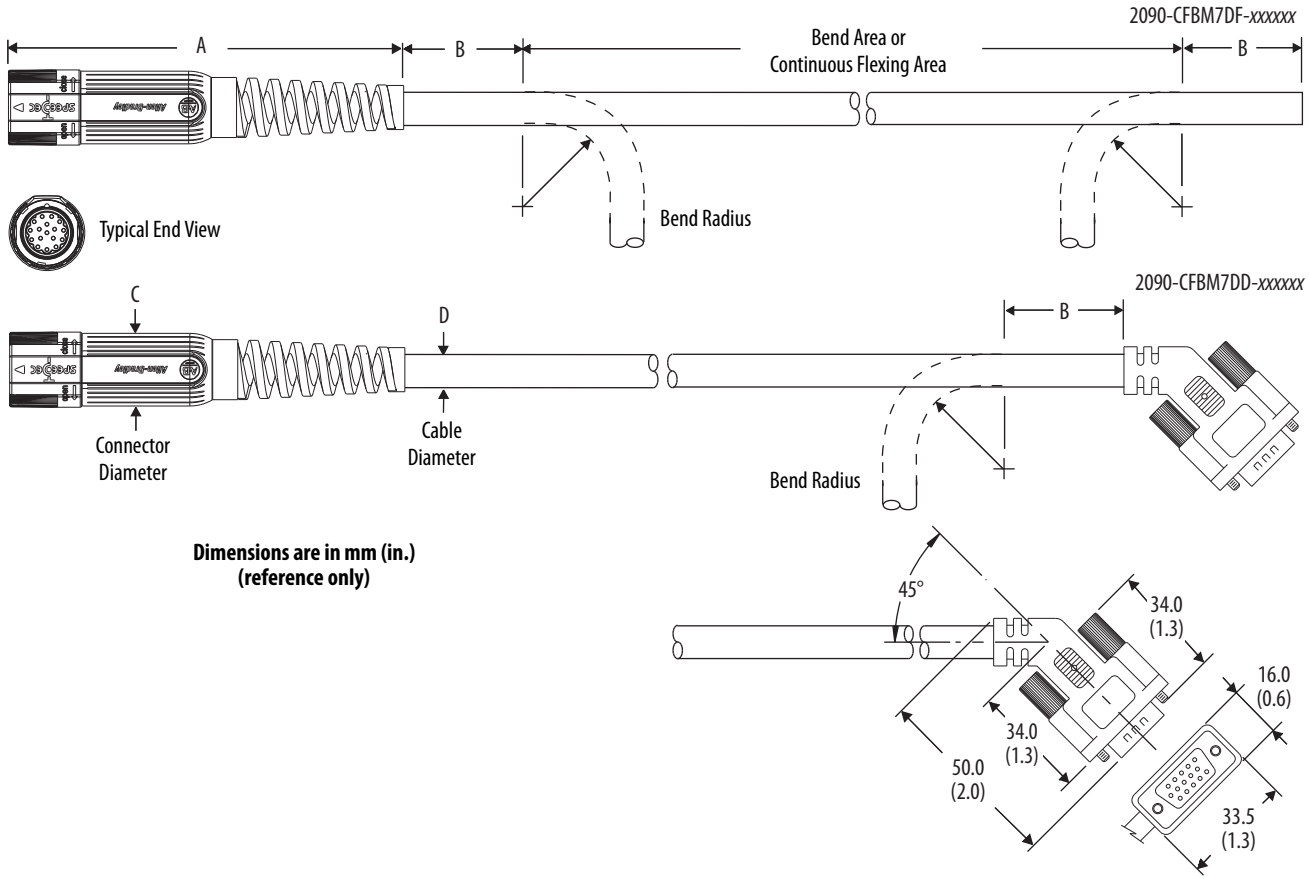

Feedback Cable Dimensions (standard, non-flex)

Feedback Cable Cat. No.	A mm (in.)	B (1) mm (in.)	C mm (in.)	D mm (in.)
2090-CFBM7DF-CEAA*xx*	147 (5.8)	68.6 (2.7)	28.0 (1.1)	9.8 (0.38)
2090-CFBM7DD-CEAA*xx*				

(1) Dimension B is based on the cable diameter. Refer to Motor Power and Feedback Cable Bend Radius Definitions on page 37 for more information.

Feedback Cable Dimensions (continuous-flex rated)

Feedback Cable Cat. No.	A mm (in.)	B (1) mm (in.)	Continuous Bend Radius (1) mm (in.)	C mm (in.)	D mm (in.)
2090-CFBM7DF-CEAF*xx*	147 (5.8)	72.1 (2.8)	124 (4.9)	28.0 (1.1)	10.3 (0.40)
2090-CFBM7DD-CEAF*xx*					
2090-CFBM7DF-CDAF*xx*		81.9 (3.2)	140 (5.5)		11.7 (0.46)

(1) Dimension B and Continuous Bend Radius are based on the cable diameter. Refer to Motor Power and Feedback Cable Bend Radius Definitions on page 37 for more information.

Feedback Cable Dimensions (threaded DIN connector)

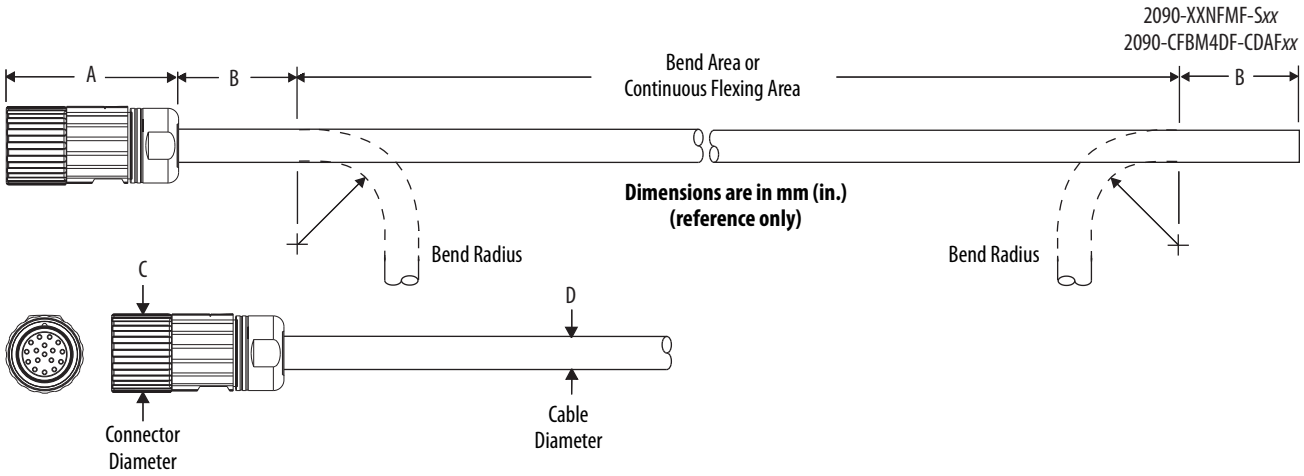

Feedback Cable Dimensions (standard, non-flex)

Feedback Cable Cat. No.	**A** mm (in.)	**B** (1) mm (in.)	**C** mm (in.)	**D** mm (in.)
2090-XXNFMF-S*xx*	57.0 (2.2)	70 (2.7)	26.0 (1.0)	10.0 (0.40)

(1) Dimension B is based on the cable diameter. Refer to Motor Power and Feedback Cable Bend Radius Definitions on page 37 for more information.

Feedback Cable Dimensions (continuous-flex rated)

Feedback Cable Cat. No.	**A** mm (in.)	**B** (1) mm (in.)	**Continuous Bend Radius** (1) mm (in.)	**C** mm (in.)	**D** mm (in.)
2090-CFBM4DF-CDAF*xx*	57.0 (2.2)	81.9 (3.2)	140 (5.5)	26.0 (1.0)	11.7 (0.46)

(1) Dimension B and Continuous Bend Radius are based on the cable diameter. Refer to Motor Power and Feedback Cable Bend Radius Definitions on page 37 for more information.

Feedback Cable Dimensions (catalog number 2090-UXNFM-S*xx*)

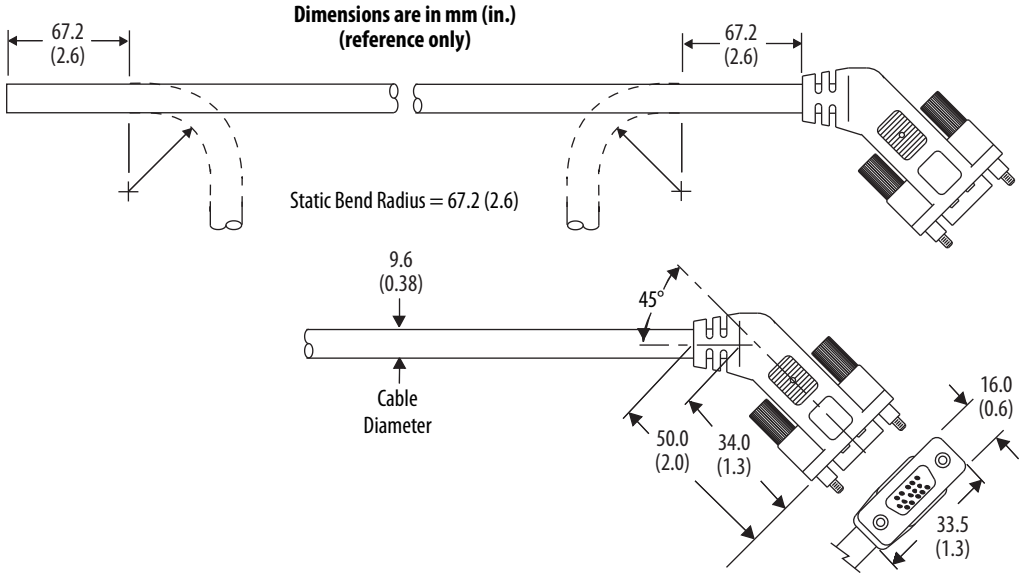

Feedback Cable Dimensions (catalog numbers 2090-CFBM6DF-CBAA*xx* and 2090-CFBM6DD-CCAA*xx*)

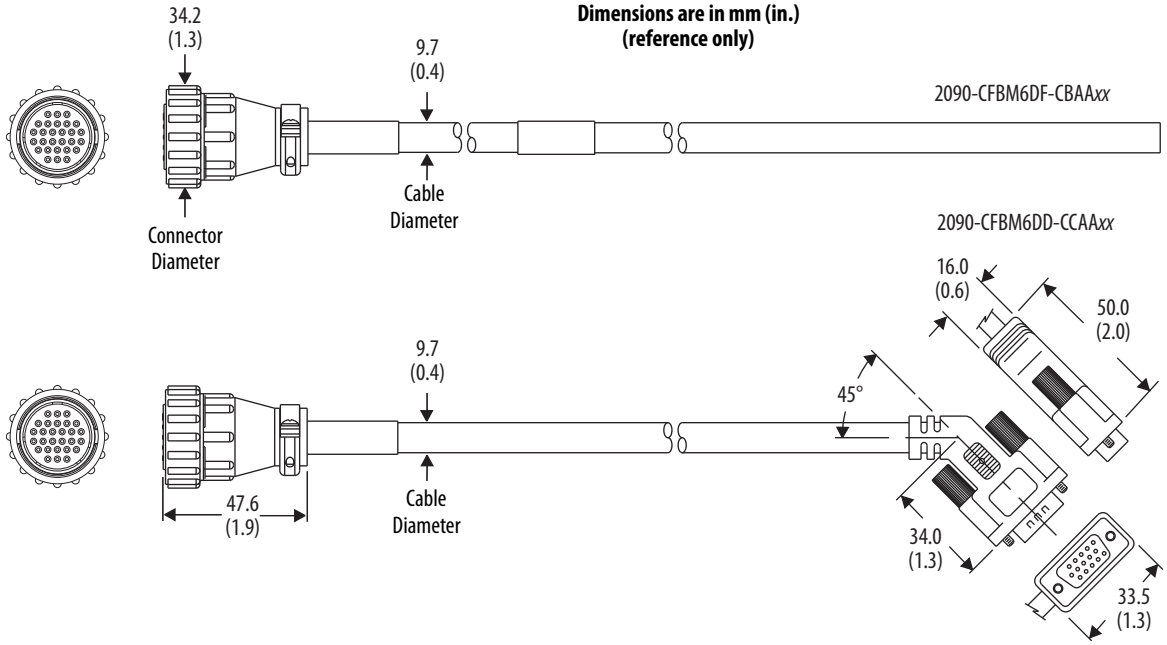

Feedback Cable Dimensions (catalog number 2090-DANFCT-S*xx*)

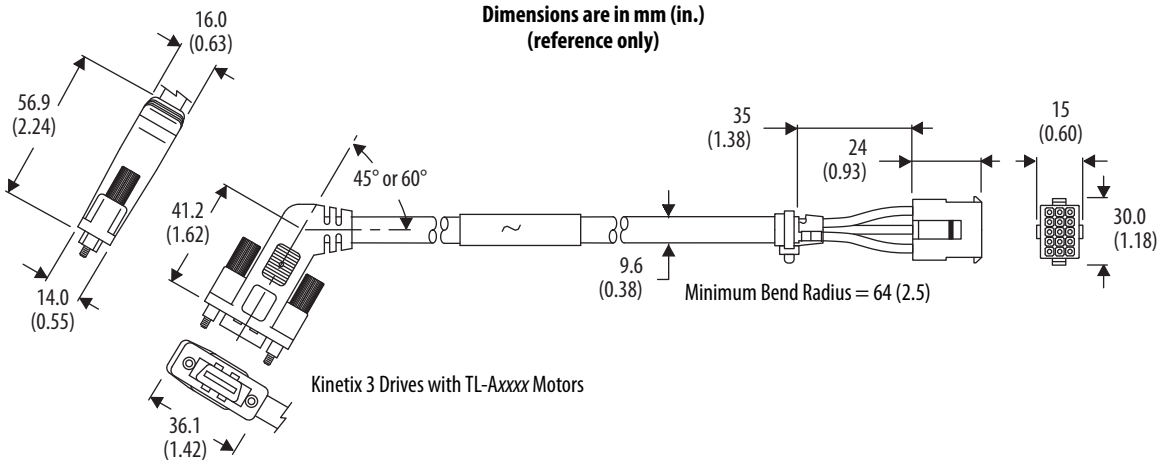

Dimensions - Continuous-flex Extension Cables

Power Cable Dimensions (SpeedTec DIN)

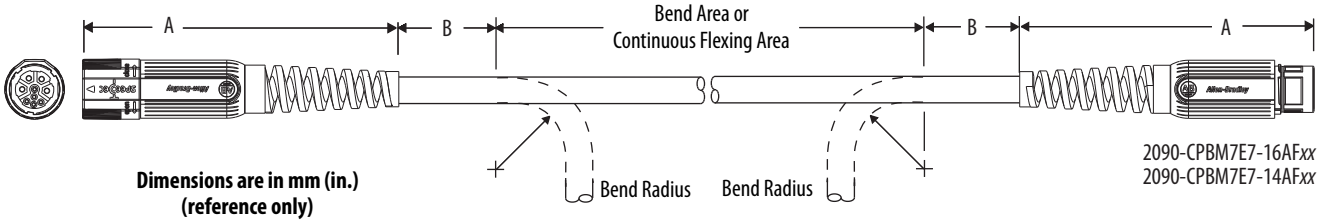

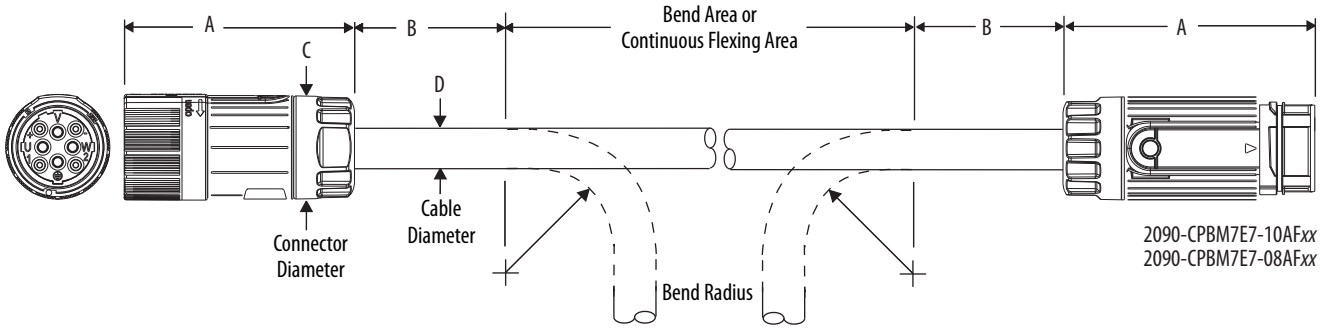

Power Cable Dimensions (continuous-flex rated)

Power Cable Cat. No.	A mm (in.)	B (1) mm (in.)	Continuous Bend Radius (1) mm (in.)	C mm (in.)	D mm (in.)
2090-CPBM7E7-16AF*xx*	147 (5.8)	87.5 (3.4)	150 (5.9)	28.0 (1.1)	12.5 (0.49)
2090-CPBM7E7-14AF*xx*		95.9 (3.8)	164 (6.4)		13.7 (0.54)
2090-CPBM7E7-10AF*xx*	97 (3.8)	125 (4.9)	214 (8.4)	46.0 (1.8)	17.8 (0.70)
2090-CPBM7E7-08AF*xx*		144 (5.7)	247 (9.7)		20.6 (0.81)

(1) Dimension B and Continuous Bend Radius are based on the cable diameter. Refer to Motor Power and Feedback Cable Bend Radius Definitions on page 37 for more information.

Feedback Cable Dimensions (SpeedTec DIN)

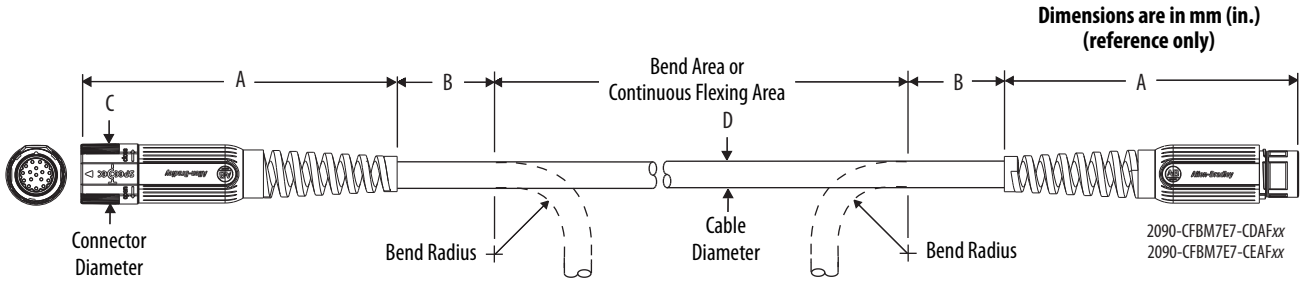

Feedback Cable Dimensions (continuous-flex rated)

Feedback Cable Cat. No.	A mm (in.)	B (1) mm (in.)	Continuous Bend Radius (1) mm (in.)	C mm (in.)	D mm (in.)
2090-CFBM7E7-CEAF*xx*	147 (5.8)	72.1 (2.8)	124 (4.9)	28.0 (1.1)	10.3 (0.40)
2090-CFBM7E7-CDAF*xx*		81.9 (3.2)	140 (5.5)		11.7 (0.46)

(1) Dimension B and Continuous Bend Radius are based on the cable diameter. Refer to Motor Power and Feedback Cable Bend Radius Definitions on page 37 for more information.

Dimensions - Transition Cables

Power Cable Dimensions

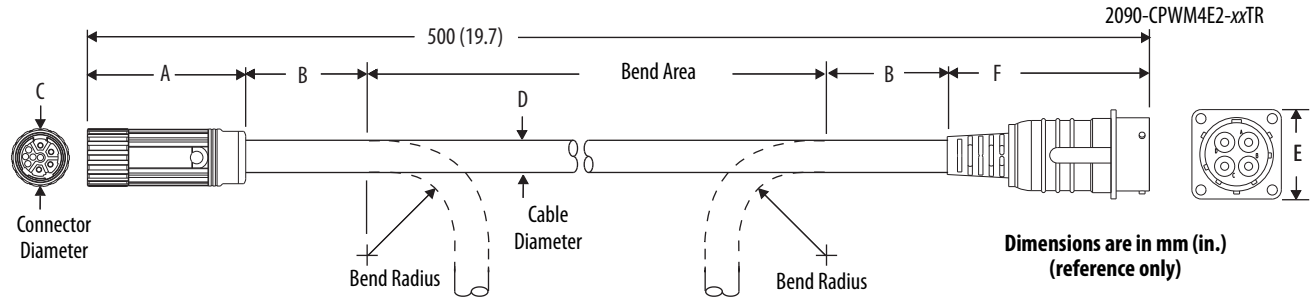

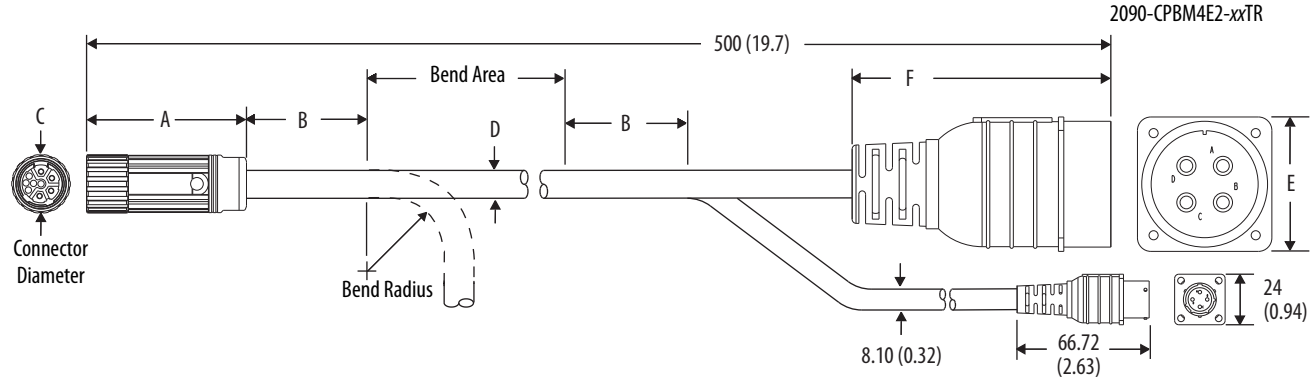

Power Cable Dimensions (standard, non-flex)

Power Cable Cat. No.	A mm (in.)	B [1] mm (in.)	C mm (in.)	D mm (in.)	E mm (in.)	F mm (in.)
2090-CPBM4E2-14TR	80.0 (3.15)	104 (4.09)	28.0 (1.10)	14.8 (0.58)	31.0 (1.22)	90 (3.54)
2090-CPWM4E2-14TR		72.8 (2.87)		10.4 (0.41)		
2090-CPBM4E2-10TR	80.0 (3.15)	129 (5.08)	46.0 (1.81)	18.4 (0.74)	46.0 (1.81)	
2090-CPWM4E2-10TR	95.0 (3.74)	102 (4.02)		14.5 (0.57)	31.0 (1.22)	
2090-CPBM4E2-08TR	98.7 (3.89)	144 (5.67)		20.5 (0.81)	46.0 (1.81)	146 (5.75)
2090-CPWM4E2-08TR	95.0 (3.74)	132 (5.20)		18.9 (0.74)		
2090-CPBM4E2-04TR	147 (5.77)	201 (7.91)	64.0 (2.5)	28.7 (1.13)	64.0 (2.52)	131 (5.17)
2090-CPWM4E2-04TR					63.7 (2.51)	132 (5.20)

(1) Dimension B is based on the cable diameter. Refer to Motor Power and Feedback Cable Bend Radius Definitions on page 37 for more information.

Feedback Cable Dimensions (catalog number 2090-CFBM4E2-CATR)

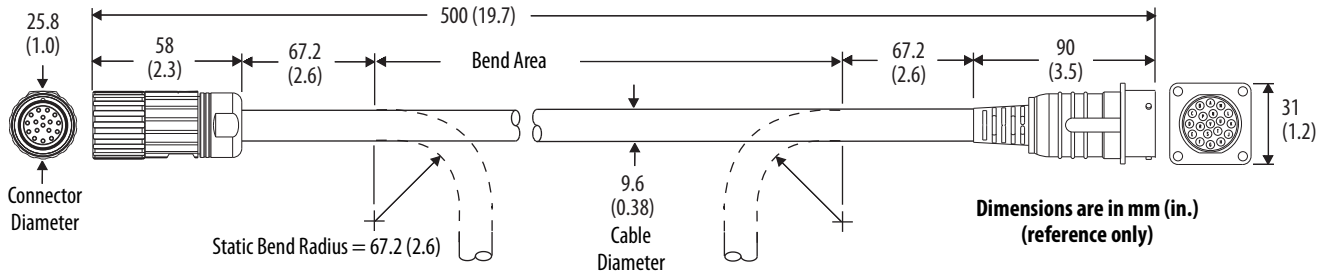

Dimensions - Motor Brake Cables

Brake Cable Dimensions (catalog number 2090-DANBT-18S*xx*)

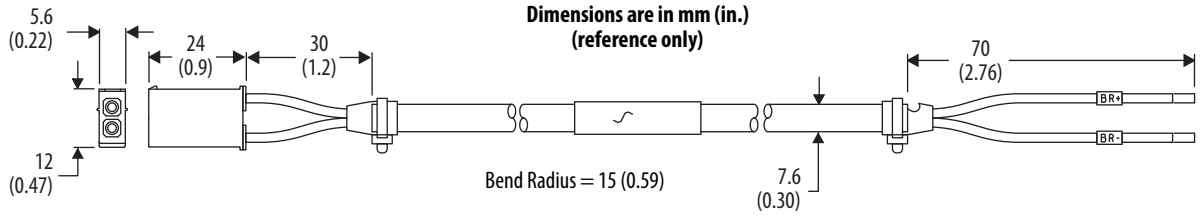

2090-Series Motor-end Cable Connector Kits

Motor-end connector kits are available for building your own cables. Kits are available for bayonet, circular DIN (M4 and M7), and circular plastic (M6) cable connectors.

Bayonet Motor-end Cable Connector Kits

Motor Series	Connector Kit Cat. No.	Description
MPL-A/B3*xxx-xx*2*x*AA, MPL-A/B4*xxx-xx*2*x*AA, MPL-A/B45*xxx-xx*2*x*AA MPL-A520K-*xx*2*x*AA MPL-B520K-*xx*2*x*AA, MPL-B540K-*xx*2*x*AA, MPL-B540D-*xx*2*x*AA, MPL-B560F-*xx*2*x*AA, and MPL-B580F-*xx*2*x*AA	2090-MPPC-S	Straight Power Connector Kit, 12 AWG max
MPL-B6*xxx-xx*2*x*AA, MPL-B8*xxx-xx*2*x*AA, MPL-B960B-*xx*2*x*AA, MPL-B960C-*xx*2*x*AA, MPL-B980B-*xx*2*x*AA, MPL-B980C-*xx*2*x*AA	2090-MPPC-08S	Straight Power Connector Kit, 8 AWG max
MPL-A/B3*xxx-xx*2*x*AA, MPL-A/B4*xxx-xx*2*x*AA, MPL-A/B45*xxx-xx*2*x*AA, MPL-A/B5*xxx-xx*2*x*AA MPL-B6*xxx-xx*2*x*AA, MPL-B8*xxx-xx*2*x*AA, MPL-B9*xxx-xx*2*x*AA	2090-MPFC-S	Straight Feedback Connector Kit
All MPL-A/B*xxx-xx*2*x*AA	2090-MPBC-S	Straight Brake Connector Kit

Circular DIN Motor-end Cable Connector Kits

Feedback Cable Connector Kits

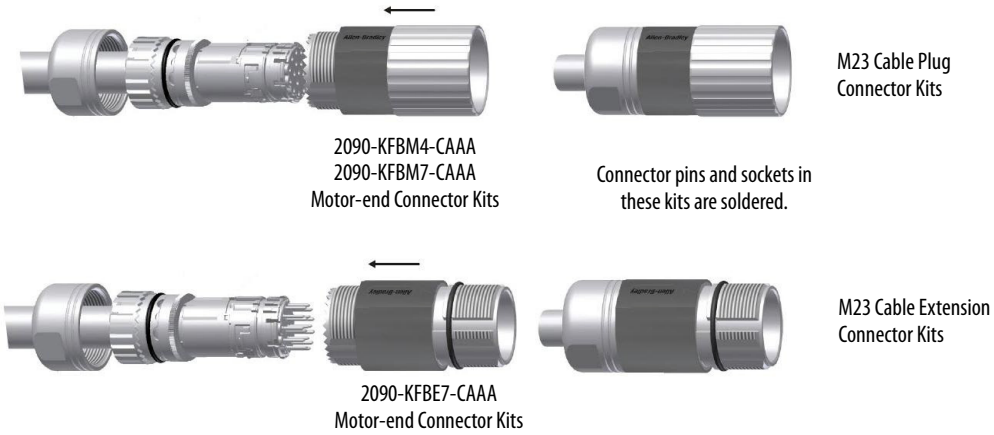

Power Cable Connector Kits

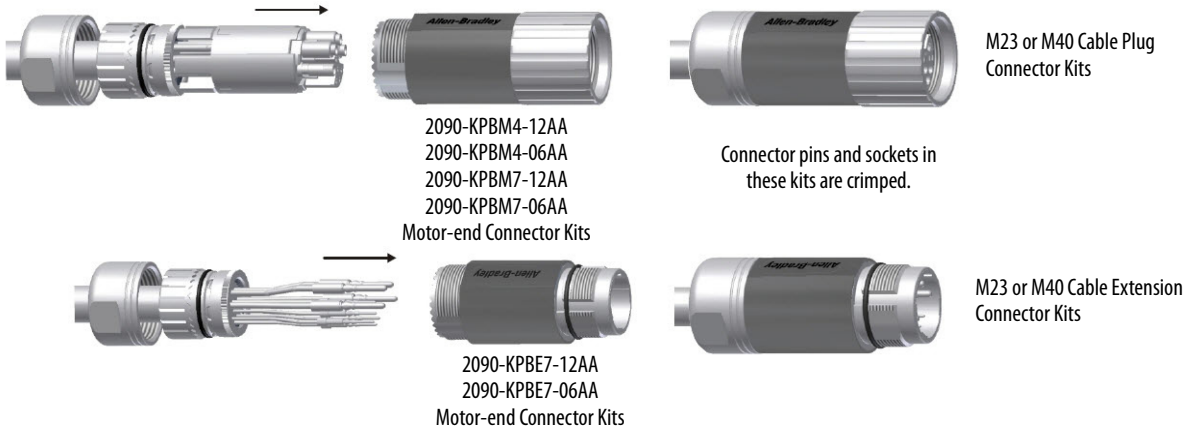

Motor-end Connector Kit Cross-reference Tables

The tables beginning on page 49 provide a cross-reference for the circular DIN (M4 and M7) connector kits above to the compatible motor series catalog number. Also provided are the bulkhead adapters for securing the cables as they pass through the cabinet and crimping tools required for properly attaching the power wires to sockets and pins. See 2090-Series Circular-DIN Connector Kits, Flange Kits, and Crimp Tools, publication 2090-IN042, for more information.

Connector kits and crimping tools are also available for circular plastic (M6) connectors. Refer to page 50 for the compatible motor series and crimp tool catalog numbers.

Power Cable Connector Kits (SpeedTec DIN)

Connector Kit Cat. No.	Description	Crimp Tool Cat. No.	Bulkhead Adapter Cat. No.	Motor Series
2090-KPBM7-12AA	Motor-end cable connector SpeedTec plug, M23 connector 16, 14, and 12 AWG motor power 18 AWG motor brake	2090-TCR47-M23	2090-KPB47-12CF	MPL-A/B15*xxx*-V/E*x*7*x*AA, MPL-A/B2*xxx*-V/E*x*7*x*AA MPL-A/B3*xx*, MPL-A/B4*xx*, MPL-A/B45*xx*, MPL-B520, MPL-B540, MPL-B560
				MPM-A/B115*xx*, MPM-A/B130*xx*, MPM-B1651C, MPM-B1651F, MPM-B1652C, MPM-B1653C
				MPF-A/B3*xxx*-S/M*x*7*x*AA, MPF-A/B4*xxx*-S/M*x*7*x*AA, MPF-A/B45*xxx*-S/M*x*7*x*AA
				MPS-A/B3*xx*, MPS-A/B45*xx*, MPS-B5*xx* (SpeedTec motor connectors)
				RDB-B130*xx*, RDB-B165*xx*, RDB-B21519, RDB-B2151C, RDB-B21529, RDB-B2152C, RDB-B21539, RDB-B2901*x*, RDB-B29024, RDB-B29026, RDB-B29034
2090-KPBM7-06AA	Motor-end cable connector SpeedTec plug, M40 connector 10, 8, and 6 AWG motor power 18 AWG motor brake	2090-TCR47-M40 (power pins) 2090-TCR47-M23 (brake pins)	2090-KPB47-06CF	MPL-A5*xx*, MPL-B580, MPL-B6*xx*, MPL-B860, MPL-B880C, MPL-B960B, MPL-B980B
				MPM-A1651F, MPM-B1651M, MPM-B1652E, MPM-A/B1652F, MPM-B1653E, MPM-A/B1653F, MPM-A/B215*xx*
				MPF-A/B5*xxx*-S/M*x*7*x*AA
				RDB-B2151F, RDB-B2152F, RDB-B2153C, RDB-B2153E, RDB-B29029, RDB-B29036, RDB-B410*xx*
2090-KPBE7-12AA	Extension cable connector SpeedTec plug, M23 connector 16, 14, and 12 AWG motor power 18 AWG motor brake	2090-TCR47-M23	2090-KPB47-12CF	MPL-A/B3*xx*, MPL-A/B4*xx*, MPL-A/B45*xx*, MPL-B520, MPL-B540, MPL-B560
				MPM-A/B115*xx*, MPM-A/B130*xx*, MPM-B1651C, MPM-B1651F, MPM-B1652C, MPM-B1653C
				MPF-A/B3*xxx*-S/M*x*7*x*AA, MPF-A/B4*xxx*-S/M*x*7*x*AA, MPF-A/B45*xxx*-S/M*x*7*x*AA
				RDB-B130*xx*, RDB-B165*xx*, RDB-B21519, RDB-B2151C, RDB-B21529, RDB-B2152C, RDB-B21539, RDB-B2901*x*, RDB-B29024, RDB-B29026, RDB-B29034
2090-KPBE7-06AA	Extension cable connector SpeedTec plug, M40 connector 10, 8, and 6 AWG motor power 18 AWG motor brake	2090-TCR47-M40 (power pins) 2090-TCR47-M23 (brake pins)	2090-KPB47-06CF	MPL-A5*xx*, MPL-B580, MPL-B6*xx*, MPL-B860, MPL-B880C, MPL-B960B, MPL-B980B
				MPM-A1651F, MPM-B1651M, MPM-B1652E, MPM-A/B1652F, MPM-B1653E, MPM-A/B1653F, MPM-A/B215*xx*
				MPF-A/B5*xxx*-S/M*x*7*x*AA
				RDB-B2151F, RDB-B2152F, RDB-B2153C, RDB-B2153E, RDB-B29029, RDB-B29036, RDB-B410*xx*

Power Cable Connector Kits (threaded DIN)

Connector Kit Cat. No.	Description	Crimp Tool Cat. No.	Bulkhead Adapter Cat. No.	Motor Series
2090-KPBM4-12AA	Motor-end cable connector Threaded plug, M23 connector 16, 14, and 12 AWG motor power 18 AWG motor brake	2090-TCR47-M23	2090-KPB47-12CF	MPL-A/B15*xxx*-V/Ex4*x*AA, MPL-A/B2*xxx*-V/Ex4*x*AA
				MPF-A/B3*xxx*-S/Mx4*x*AA, MPF-A/B4*xxx*-S/Mx4*x*AA, MPF-A/B45*xxx*-S/Mx4*x*AA, MPF-A/B5*xxx*-S/Mx4*x*AA
				MPS-A/B3*xx*, MPS-A/B45*xx*, MPS-B5*xx* (threaded motor connectors)
2090-KPBM4-06AA	Motor-end cable connector Threaded plug, M40 connector 10, 8, and 6 AWG motor power 18 AWG motor brake	2090-TCR47-M40 (power pins) 2090-TCR47-M23 (brake pins)	2090-KPB47-06CF	MPF-A/B5*xxx*-S/Mx4*x*AA

Feedback Cable Connector Kits (circular DIN)

Connector Kit Cat. No.	Description	Crimp Tool Cat. No.	Bulkhead Adapter Cat. No.	Motor Series
2090-KFBM7-CAAA	Motor-end cable connector SpeedTec plug, M23 connector	N/A (soldered contacts)	2090-KFB47-CF	MPL-A/B15*xxx*-V/Ex7*x*AA or MPL-A/B2*xxx*-V/Ex7*x*AA MPL-A/B3*xx*, MPL-A/B4*xx*, MPL-A/B45*xx*, MPL-A/B5*xx* MPL-B6*xx*, MPL-B8*xx*, MPL-B9*xx* MPM-A/B115*xx*, MPM-A/B130*xx*, MPM-A/B165*xx*, MPM-A/B215*xx* MPF-A/B3*xxx*-S/Mx7*x*AA, MPF-A/B4*xxx*-S/Mx7*x*AA, MPF-A/B45*xxx*-S/Mx7*x*AA, MPF-A/B5*xxx*-S/Mx7*x*AA MPS-A/B3*xx*, MPS-A/B45*xx*, MPS-A/B5*xx* (SpeedTec motor connectors) RDB-B130*xx*, RDB-B165*xx*, RDB-B215*xx*, RDB-B290*xx*, RDB-B410*xx*
2090-KFBE7-CAAA	Extension cable connector SpeedTec plug, M23 connector			MPL-A/B3*xx*, MPL-A/B4*xx*, MPL-A/B45*xx*, MPL-A/B5*xx*, MPL-B6*xx*, MPL-B8*xx*, MPL-B9*xx*
				MPM-A/B115*xx*, MPM-A/B130*xx*, MPM-A/B165*xx*, MPM-A/B215*xx*
				MPF-A/B3*xxx*-S/Mx7*x*AA, MPF-A/B4*xxx*-S/Mx7*x*AA, MPF-A/B45*xxx*-S/Mx7*x*AA, MPF-A/B5*xxx*-S/Mx7*x*AA
				RDB-B130*xx*, RDB-B165*xx*, RDB-B215*xx*, RDB-B290*xx*, RDB-B410*xx*
2090-KFBM4-CAAA	Motor-end cable connector Threaded plug, M23 connector			MPL-A/B15xxx-V/Ex4xAA or MPL-A/B2xxx-V/Ex4xAA MPF-A/B3xxx-S/Mx4xAA, MPF-A/B4xxx-S/Mx4xAA, MPF-A/B45xxx-S/Mx4xAA, MPF-A/B5xxx-S/Mx4xAA MPS-A/B3xx, MPS-A/B45xx, MPS-A/B5xx (threaded motor connectors)

Power and Feedback Cable Connector Kits (circular plastic)

Connector Kit Cat. No.	Description	Crimp Tool Cat. No.	Bulkhead Adapter Cat. No.	Motor Series
2090-KPBM6-16AA	Straight Power Connector Kit	58495-1 (Tyco AMP)	N/A	All TLY-A*xxx* motors
2090-KFBM6-AA	Straight Feedback Connector Kit	58448-1 (Tyco AMP)	N/A	

2090-Series Bulkhead Adapter Kits

These bulkhead adapter kits let you secure your cables as they pass through the cabinet. Adapter kits apply to 2090-Series power and feedback cables and 2090-Series integrated drive-motor hybrid cables.

2090-Series Power Cable Compatibility

Bulkhead Adapter Cat. No.	Standard (non-flex) Power Cable Cat. No.	Continuous-flex Power Cable Cat. No.	Description		Connector Diameter mm (in.)
2090-KPB47-12CF	2090-CPWM7DF-16AA*xx*	2090-CPWM7DF-16AF*xx*	Power only	SpeedTec DIN	28.0 (1.1)
	2090-CPWM7DF-14AA*xx*	2090-CPWM7DF-14AF*xx*			
	2090-CPWM7DF-12AA*xx*	N/A			
	2090-CPBM7DF-16AA*xx*	2090-CPBM7DF-16AF*xx*	Power/brake		
	2090-CPBM7DF-14AA*xx*	2090-CPBM7DF-14AF*xx*			
	2090-CPBM7DF-12AA*xx*	N/A			
	N/A	2090-CPBM7E7-16AA*xx*			
	N/A	2090-CPBM7E7-14AA*xx*			
	N/A	2090-CPWM4DF-16AF*xx*	Power only	Threaded DIN	
	N/A	2090-CPBM4DF-16AF*xx*	Power/brake		
	2090-XXNPMF-16S*xx*	N/A			
2090-KPB47-06CF	2090-CPWM7DF-10AA*xx*	2090-CPWM7DF-10AF*xx*	Power only	SpeedTec DIN	46.0 (1.8)
	2090-CPWM7DF-08AA*xx*	2090-CPWM7DF-08AF*xx*			
	2090-CPBM7DF-10AA*xx*	2090-CPBM7DF-10AF*xx*	Power/brake		
	2090-CPBM7DF-08AA*xx*	2090-CPBM7DF-08AF*xx*			
	2090-CPBM7DF-06AA*xx*	N/A			

2090-Series Feedback Cable Compatibility

Bulkhead Adapter Cat. No.	Standard (non-flex) Feedback Cable Cat. No.	Continuous-flex Feedback Cable Cat. No.	Description		Connector Diameter mm (in.)
2090-KPB47-12CF	2090-CFBM7DF-CEAA*xx*	2090-CFBM7DF-CEAF*xx*	Feedback	SpeedTec DIN	28.0 (1.1)
	2090-CFBM7DD-CEAA*xx*	2090-CFBM7DD-CEAF*xx*			
	N/A	2090-CFBM7DF-CDAF*xx*			
	N/A	2090-CFBM7E7-CDAF*xx*			
	N/A	2090-CFBM7E7-CEAF*xx*			
2090-KFB47-CF	2090-CFBM4DF-CEAA*xx*	N/A		Threaded DIN	26.0 (1.0)
	N/A	2090-CFBM4DF-CDAF*xx*			
	2090-XXNFMF-S*xx*	N/A			

2090-Series Integrated Motor-Drive Hybrid Cable Compatibility

Bulkhead Adapter Cat. No.	Hybrid Cable Cat. No.	Description		Connector Diameter mm (in.)
2090-KPB47-12CF	2090-CHBIFS8-12AA*xx*	Hybrid	SpeedTec	25.4 (1.0)
	2090-CHBP8S8-12AA*xx*			

2090-Series Single Motor Cable Compatibility

Bulkhead Adapter Cat. No.	Standard (non-flex) (1) Power Cable Cat. No.	Continuous-flex (1) Power Cable Cat. No.	Description		Connector Diameter mm (in.)
2090-KPB47-12CF	2090-CSWM1DF/DE/DG-18AA*xx*	2090-CSWM1DF/DE/DG-18AF*xx*	Power/feedback	SpeedTec DIN	28.0 (1.1)
	2090-CSWM1DF/DE/DG-14AA*xx*	2090-CSWM1DF/DE/DG-14AF*xx*			
	2090-CSBM1DF/DE/DG-18AA*xx*	2090-CSBM1DF/DE/DG-18AF*xx*	Power/brake/ feedback		
	2090-CSBM1DF/DE/DG-14AA*xx*	2090-CSBM1DF/DE/DG-14AF*xx*			
	N/A	2090-CSBM1E1-18AF*xx*			
		2090-CSBM1E1-14AF*xx*			
2090-KPB47-06CF	2090-CSBM1DF/DE/DG-10AA*xx*	2090-CSBM1DF/DE/DG-10AF*xx*	Power/brake/ feedback	SpeedTec DIN	46.0 (1.8)
	N/A	2090-CSBM1DE-08AF*xx*			
		2090-CSBM1DE-06AF*xx*			
	N/A	2090-CSBM1E1-10AF*xx*			
		2090-CSBM1E1-08AF*xx*			
		2090-CSBM1E1-06AF*xx*			

(1) Cable catalog numbers extended with DF/DE/DG reflects 2090-CS*x*M1DF, 2090-CS*x*M1DE, and 2090-CS*x*M1DG cables.

Bulkhead Adapter Kit Mounting Dimensions

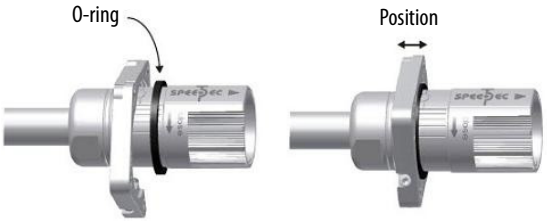

Dimensions are in mm (in.)

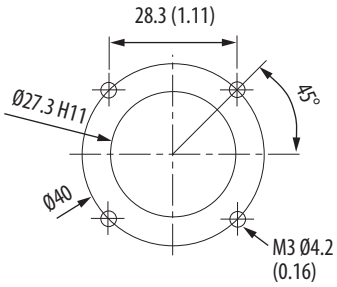

2090-KFB47-CF and 2090-KPB47-12CF
(M23) Bulkhead Adapter Kits

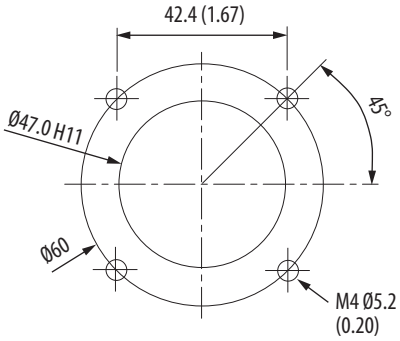

2090-KPB47-06CF
(M40) Bulkhead Adapter Kits

Bulkhead Adapter Kit Dimensions

Dimensions are in mm (in.)

2090-KFB47-CF
Bulkhead Adapter

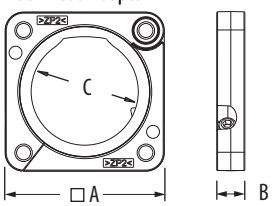

2090-KPB47-12CF
Bulkhead Adapter

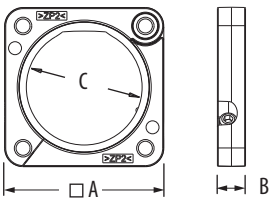

2090-KPB47-06CF
Bulkhead Adapter

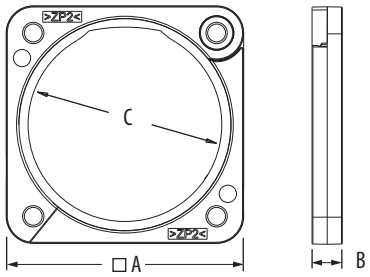

Bulkhead Adapter Cat. No.	Size	Dimension A mm (in.)	Dimension B mm (in.)	Dimension C (reference) mm (in.)
2090-KFB47-CF	M23	36.8 (1.44)	6.5 (0.26)	23.0 (0.90)
2090-KPB47-12CF				26.0 (1.02)
2090-KPB47-06CF	M40	54.8 (2.16)	7.0 (0.28)	43.0 (1.69)

2090-Series Interface Cables

A wide variety of communication and interface cables are available for connecting servo drives to ControlLogix® and CompactLogix™ controller modules, and to other Allen-Bradley products.

Catalog Numbers - 2090-Series Interface Cables

Catalog numbers consist of various characters, each of which identifies a specific option for that component. Use the catalog numbering charts below to understand the configuration of your cables. For questions regarding product availability, contact your Allen-Bradley distributor.

Control and Configuration Interface Cables

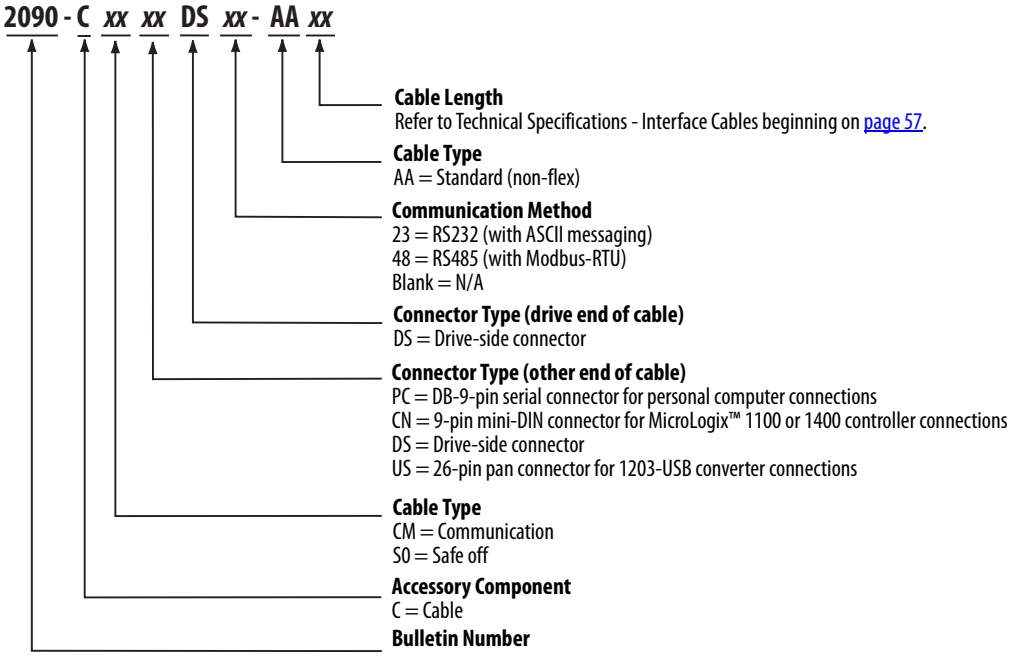

Sercos interface Fiber-optic Cables

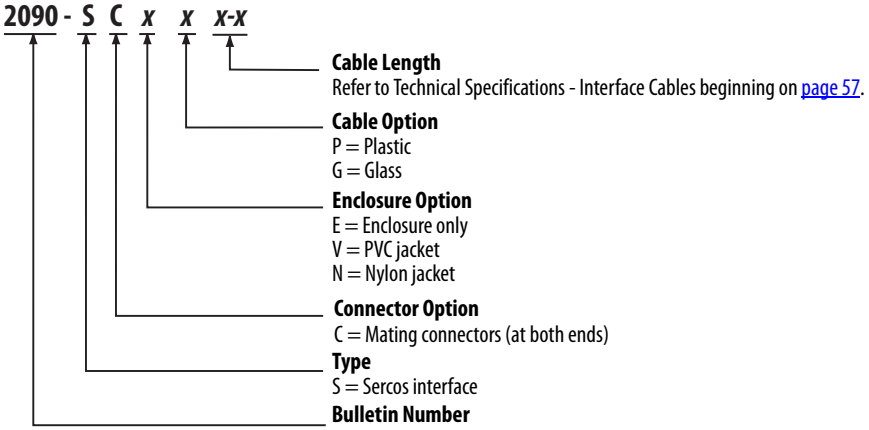

Fiber-optic Cable Connection Examples

The length of each transmission section (point A to B) can be up to 32 m (105 ft) for plastic cable and 50...200 m (164.2...656.7 ft) for glass cable. In this example, the second Kinetix 7000 drive is mounted in a separate cabinet and connected with bulkhead adapters.

Fiber-optic Cable Example for Single-axis Connections

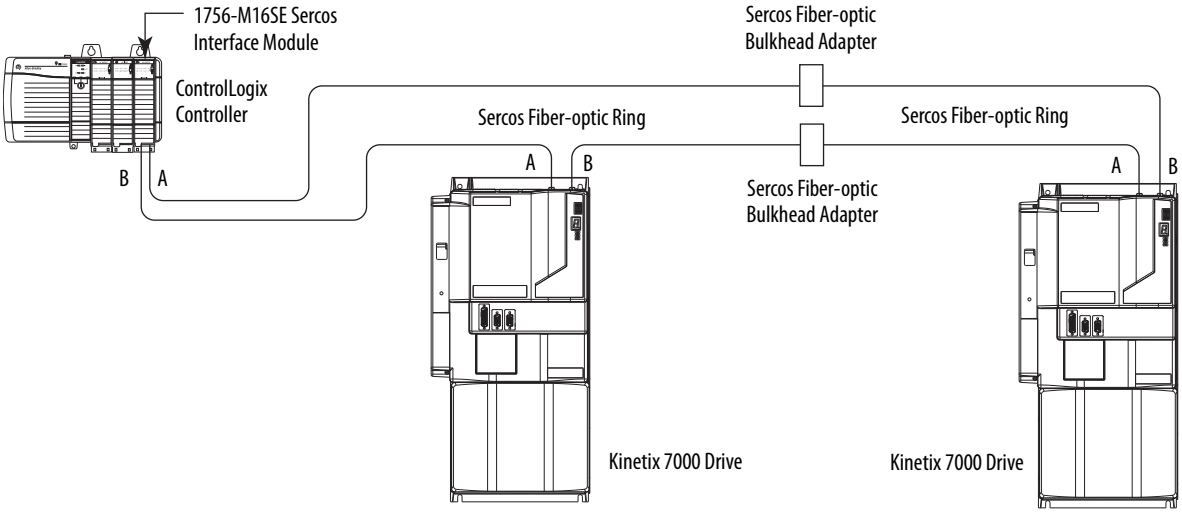

IMPORTANT To avoid signal loss, do not use bulkhead adapters to connect glass cables. Use bulkhead adapters only for making plastic-to-plastic cable connections.

Multi-axis servo drives with Sercos interface have specific cable lengths for making drive-to-drive connections for single-wide and double-wide modules.

Drive-to-Drive Cable Length for Multi-axis Drive Families

IAM Module	Adjacent Drive Module		Cable Cat. No.	Cable Length m (in.)
Kinetix 2000	2093-AMP1, 2093-AMP2, or 2093-AMP5	Single-wide	2090-SCEP0-1	0.1 (5.1)
	2093-AM01 or 2093-AM02	Double-wide	2090-SCEP0-2	0.2 (7.1)
Kinetix 6000	2094-AM*xx*-S, 2094-BMP5-S, 2094-BM01-S, or 2094-BM02-S	Single-wide	2090-SCEP0-1	0.1 (5.1)
	2094-SEPM-B24-S			
	2094-BMP5-M, 2094-BM01-M, or 2094-BM02-M		2090-SCEP0-2	0.2 (7.1)
	2094-BM03-S and 2094-BM05-S	Double-wide		
Kinetix 6200	2094-BMP5-M, 2094-BM01-M, or 2094-BM02-M	Single-wide	2090-SCEP0-2	0.2 (7.1)
	2094-SEPM-B24-S			
	2094-BMP5-S, 2094-BM01-S, or 2094-BM02-S		2090-SCEP0-1	0.1 (5.1)
	2094-BM03-M and 2094-BM05-M	Double-wide	2090-SCEP0-3	0.3 (12.0)

Drive-to-Drive Fiber-optic Cable Length Example (Kinetix 2000 and Kinetix 6000 drives)

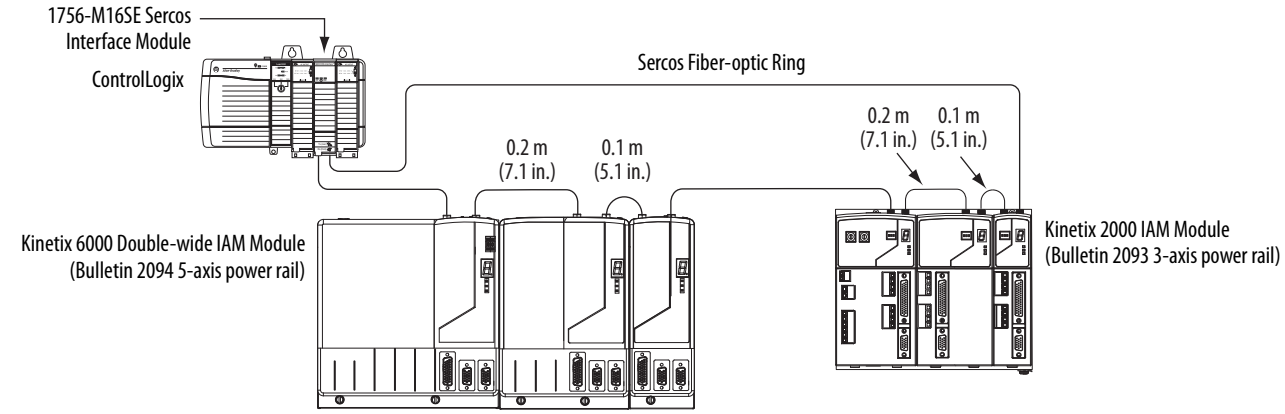

Drive-to-Drive Fiber-optic Cable Length Example (Kinetix 6000, Kinetix 6000M, and Kinetix 6200 drives)

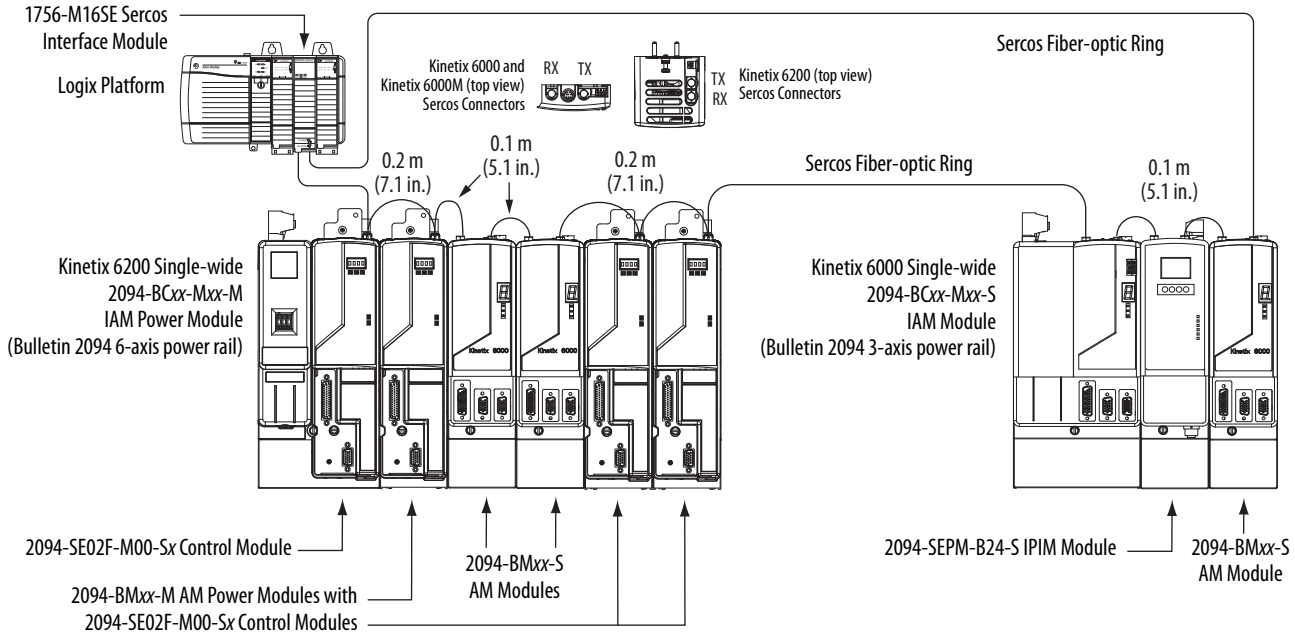

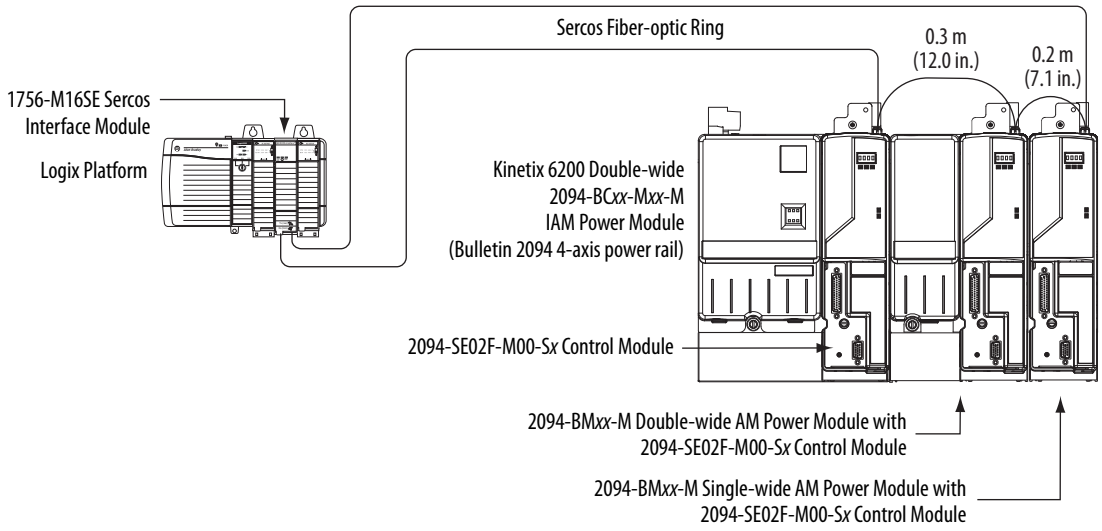

Ethernet Cable Connection Examples

Shielded Ethernet cable is available in lengths up to 78 m (256 ft). However, the total length of Ethernet cable (point A to point B) connecting drive-to-drive, drive-to-controller, or drive-to-switch must not exceed 100 m (328 ft).

Drive-to-Drive Ethernet Cable Length Example (Kinetix 6500 drives)

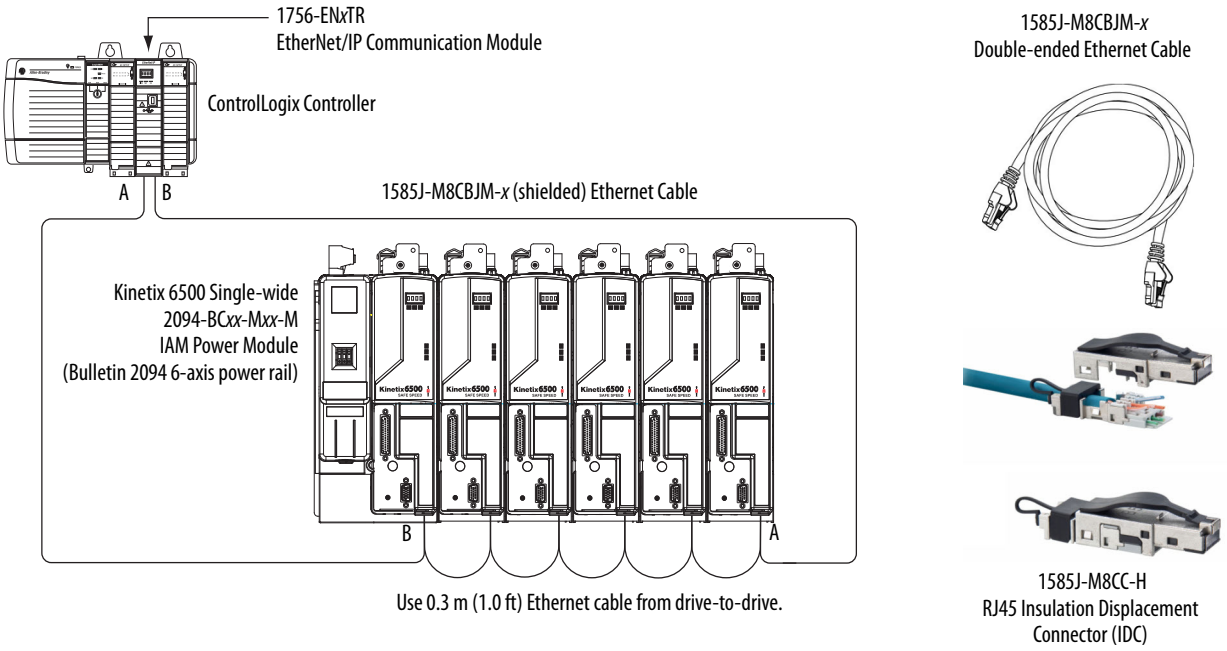

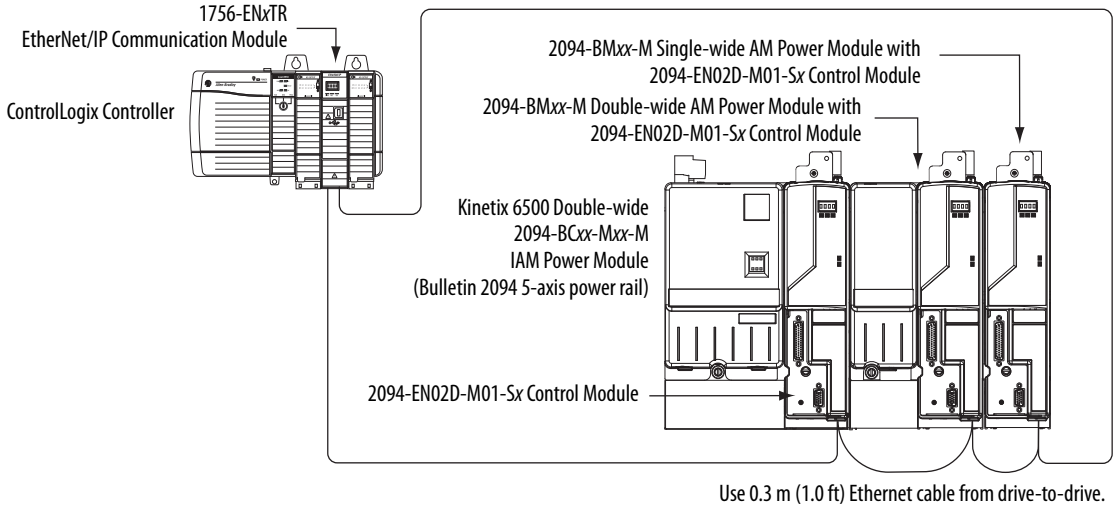

Ethernet Cable Example for Single-axis Connections (Kinetix 300/350 drives)

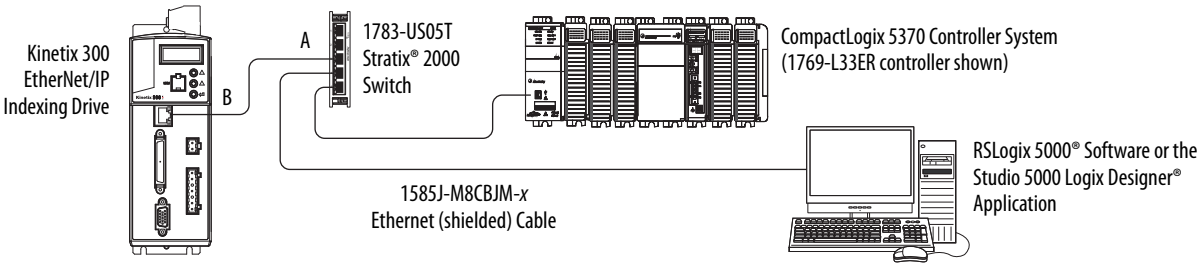

Technical Specifications - Interface Cables

Applications and Standard Lengths

Cat. No.	Descriptions	Standard Cable Lengths m (ft)
2090-SCEP*x-x*	Sercos fiber-optic plastic cables suitable for in-cabinet duty only. Connectors are provided at both ends	0-1 (5.1 in.) (1) 0-2 (7.1 in.) (1) 0-3 (1.0) (1) 1-0 (3.2) 3-0 (9.8) 5-0 (16.4) 8-0 (26.2) 10-0 (32.8) 15-0 (49.2) 20-0 (65.5) 25-0 (82.0) 32-0 (105.0)
2090-SCNP*x-x*	Sercos fiber-optic plastic cables suitable for On-Machine™ duty. Connectors are provided at both ends	
2090-SCVP*x-x*	Sercos fiber-optic plastic cables suitable for outdoor and conduit duty. Connectors are provided at both ends	
2090-SCVG*x-x*	Sercos fiber-optic glass cables suitable for outdoor and conduit duty. Connectors are provided at both ends	50-0 (164.2) 100-0 (328.3) 150-0 (492.5) 200-0 (656.7)
2090-S-BLHD	Sercos fiber-optic cable bulkhead adapter (2 per pack)	
1585J-M8CBJM-*x* (2)	Double-ended (shielded) Ethernet cables for use when programming the safety configuration and the Logix 5000™ EtherNet/IP™ network module	0M15 = 0.15 (6 in.) 0M3 = 0.3 (1.0) 0M4 = 0.4 (1.3) 0M6 = 0.6 (2.0) 1 (3.2) 2 (6.6) 5 (16.4) 10 (32.8)
1585J-M8UBJM-*x* (2)	Double-ended (shielded) Ethernet cables for use in high-flex applications	
1585J-M8CB-*x* (2)	Single-ended (shielded) Ethernet cables for use when programming the safety configuration and the Logix 5000 EtherNet/IP network module	2 (6.6) 5 (16.4) 10 (32.8)
1585J-M8CC-H (2)	RJ45 insulation displacement connector (IDC) for use when making your own cables	100 (328) 300 (984) 600 (1968)
1585J-C8CB-S*xxx* (2)	Shielded Ethernet (bulk) cable for use when making your own cables	
2090-CCMDSDS-48AA*xx*	Kinetix 3 control interface cable for drive-to-drive configurations	01 = 1.0 (3.2) P3 = 0.3 (0.98)
2090-CCMPCDS-23AA*xx*	Kinetix 3 serial interface cable to personal computer	01 = 1.0 (3.2) 03 = 3.0 (9.8)
2090-CCMCNDS-48AA*xx*	Kinetix 3 control interface cable to MicroLogix controller	
2090-CCMUSDS-48AA*xx*	Kinetix 3 control interface for drive-to-1203-USB converter	
2090-DAIO-D50*xxx*	Kinetix 3 control interface I/O cable (flying leads)	
2090-CS0DSDS-AA*xx*	Kinetix 6200/6500 interface cables for I/O and cascading safe torque-off signals from drive-to-drive	02 = 0.2 (7.1 in.) 03 = 0.3 (1.0) 10 = 1.0 (3.2)
1202-C02	Drive-to-drive safety cable for connecting single-wide Kinetix 6000 axis modules	200 mm (7.9 in.)
1202-C03	Drive-to-drive safety cable for connecting double-wide Kinetix 6000 axis modules	350 mm (13.8 in.)
1202-C10	Drive-to-drive safety cable for connections between two Kinetix 6000 power rails, two Kinetix 7000 drives, or from the Kinetix 6000 power rail to Kinetix 7000 drive	1050 mm (41.3 in.)
1202-C30	Drive-to-drive safety cable for any connections requiring additional cable length within the system enclosure.	30 (9.8)
2090-XXNRB-10F0P5	Resistive Brake Module (RBM) to Kinetix 6000 and Kinetix 6200/6500 drives — 10 AWG	0.5 (1.6)
2090-XXNRB-8F0P6	Resistive Brake Module (RBM) to Kinetix 6000 and Kinetix 6200/6500 drives — 8 AWG	0.6 (2.0)

(1) Only available as 2090-SCEP*x-x*.
(2) Refer to the Industrial Ethernet Media Brochure, publication 1585-BR001, for product specifications.

Interface Cable Specifications

Interface Cable Cat. No.	Description	Specifications		
		Ratings	Shield	Jacket Material
2090-DAIO-D50*xx*	Kinetix 3 control interface I/O cable, flying leads	90 °C (194 °F), 30V	Aluminum Polyester 100% coverage Braid shield coverage, 85% min	TPE
2090-CCMPCDS-23AA*xx*	Kinetix 3 serial interface to personal computer	80 °C (176 °F), 300V		PVC
2090-CCMCNDS-48AA*xx*	Kinetix 3 control interface to MicroLogix controller			
2090-CCMDSDS-48AA*xx*	Kinetix 3 control interface for drive-to-drive configurations			
2090-CCMUSDS-48AA*xx*	Kinetix 3 control interface for drive-to-1203-USB converter			
2090-*x*XNRB-*xx*F*xxx*	Resistive Brake Module (RBM) to drive interface	105 °C (221 °F), 600V		TPE
2090-SCEP*x-x*	Sercos interface fiber-optic cable (drive to drive, drive to 1756-M*xx*SE module, or drive to 1768-M04SE module)	-55…+85 °C (-67…+185 °F)		Chlorinated Polyethylene
2090-SCNP*x-x*				Nylon
2090-SCVP*x-x*				Polyethylene/Kevlar covered by PVC
2090-SCVG*x-x*		-20…+75 °C (-4…+67 °F)		Kevlar and PVC

Dimensions - Interface Cables

Control Interface Cable Dimensions (catalog number 2090-DAIO-D50*xx*)

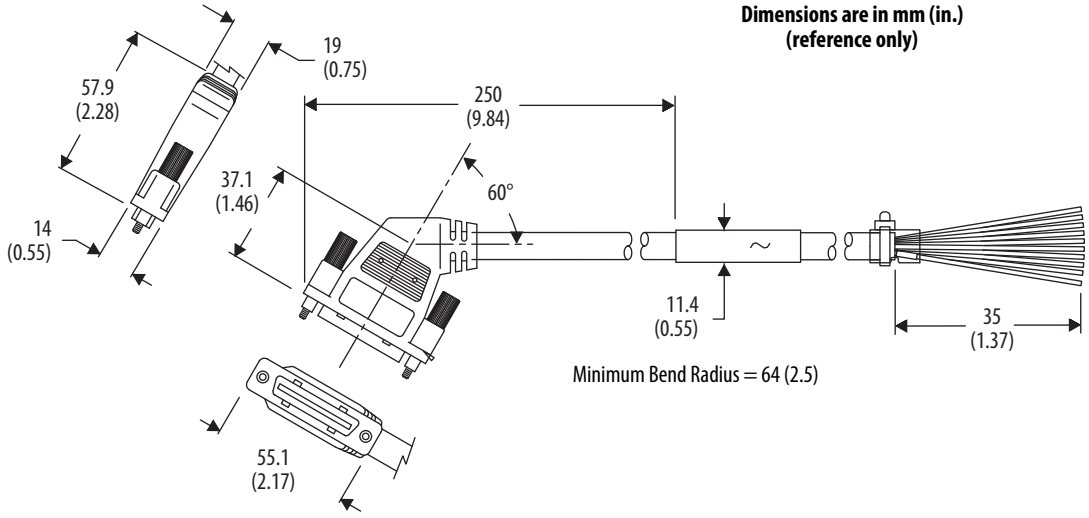

Control and Configuration Serial Cable Dimensions

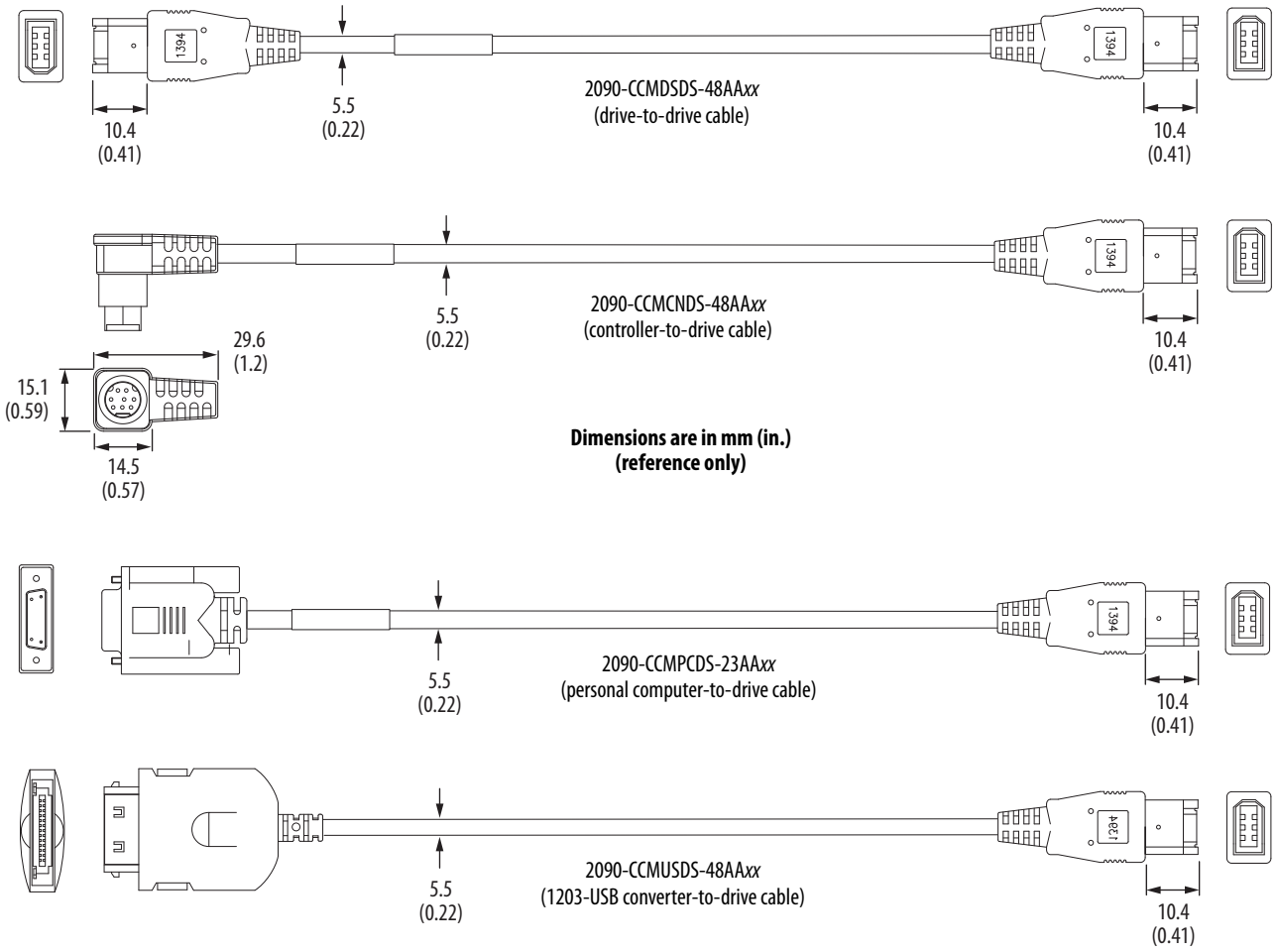

Cascading Safe Torque-off Interface Cable Dimensions (catalog number 2090-CS0DSDS-AA*xx*)

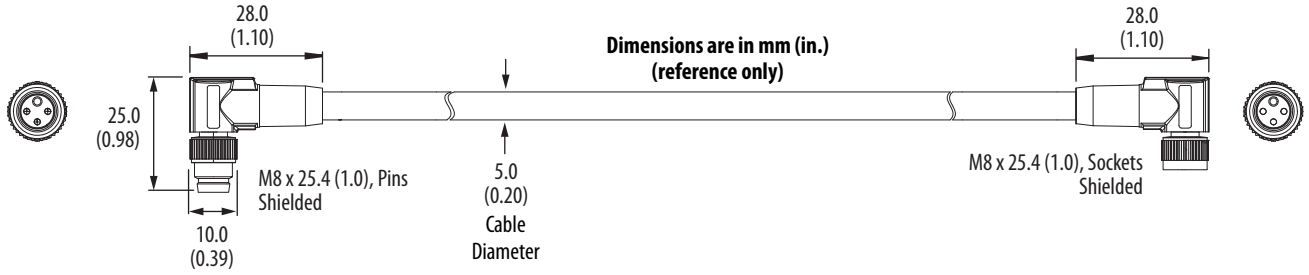

Sercos interface Fiber-optic Cable Dimensions

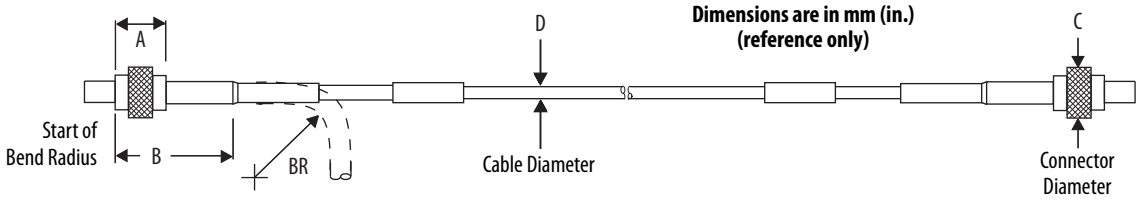

Fiber-optic Cable Cat. No.	A mm (in.)	B mm (in.)	BR (1) mm (in.)	C mm (in.)	D mm (in.)
2090-SCEP*x-x*	7 (0.27)	25 (1.0)	25 (1.0)	10 (0.39)	2.2 (0.09)
2090-SCNP*x-x*					
2090-SCVP*x-x*			40 (1.6)		5.0 (0.2)
2090-SCVG*x-x*			30 (1.2)		

(1) Standard (non-flex) cables have a regular maintenance and installation bend radius of 10 times (10x) the cable diameter.

Bulkhead Adapter Dimensions (2090-S-BLHD)

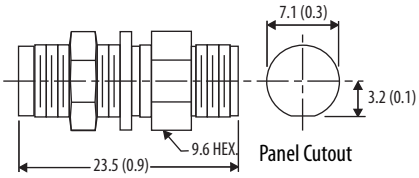

RBM Module Interface Cable Dimensions

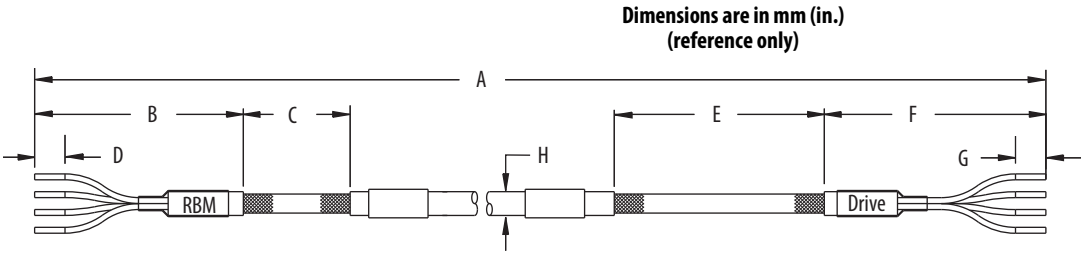

RBM Module Cable Cat. No.	A mm (in.)	B mm (in.)	C mm (in.)	D mm (in.)	E mm (in.)	F mm (in.)	G mm (in.)	H mm (in.)
2090-XXNRB-10F0P5	517 (20.3)	115 (4.5)	50 (1.9)	16 (0.6)	120 (4.7)	74 (2.9)	16 (0.6)	16 (0.63)
2090-XXNRB-8F0P6	619 (24.4)					74 (2.9)		19 (0.75)

2090-Series Kinetix 6000M Integrated Drive-Motor Cables

Hybrid cables with rugged SpeedTec connectors, and network cables with straight and right-angle connector options, are available for connecting your Kinetix 6000M integrated drive-motor (IDM) system.

IMPORTANT Hybrid and network cables have a minimum bend radius of 7 times the cable diameter.

Kinetix 6000M Integrated Drive-Motor Cable Overview

2090-Series integrated drive-motor cables with SpeedTec connectors let OEMs and end-users standardize their machines on a common cable family. These cables, designed by Rockwell Automation for optimal performance with Allen-Bradley integrated drive-motor systems, offer best-in-class features and standards compliance. Innovative features, configuration options, and accessories provide machine builders with complete control of the cable requirements in their machines.

Hybrid and network cables connect the Kinetix 6000M power interface module (IPIM) and daisy-chain to as many as 16 Kinetix 6000M integrated drive-motor (IDM) units.

Kinetix 6000M Integrated Drive-Motor Cable Features

- NFPA 79 Compliant
- UL Listed cable with 1000V, 105 °C (221 °F) insulation, also carries applicable Canadian approvals
  - Hybrid and network cables with PLTC-ER rating for use in cable trays and exposed run applications
- Hybrid (htec) cable construction permits power and signal conductors in a single cable
  - SpeedTec connection system
- DESINA compliant jacket coloring for easy identification and separation of cables in the machine
- Cables are included in the Rockwell Automation servo system Declaration of Conformity (DoC)
- Hybrid coupler cable allows integrated drive-motor units to be bypassed for servicing and to accommodate future servo axes
- Manual brake release cable allows holding brakes to be disengaged during machine assembly and servicing

Catalog Numbers - 2090-Series Kinetix 6000M Integrated Drive-Motor Cables

Catalog numbers consist of various characters, each of which identifies a specific option for that component. Use the catalog numbering charts below to understand the configuration of your component.

Kinetix 6000M Integrated Drive-Motor Hybrid Cables

2090 - C HB *xx* S8 - 12 AA *xx*

Cable Length
Refer to Technical Specifications - Kinetix 6000M Integrated Drive-Motor Cables on page 66.

Cable Type
AA = Standard

Wire Gauge Size
12 AWG

Down-stream Connector Type
S8 = SpeedTec connector (socket)

Up-stream Connector Type
P8 = SpeedTec connector (pin)
IF = IPIM-end, flying lead

Cable Type
HB = Kinetix 6000M hybrid
CP = Coupler bypass
BK = Brake release

Accessory Component
C = Cable

Bulletin Number

Kinetix 6000M Integrated Drive-Motor Network Cables

2090 - C NS *xx* *xx* - AA *xx*

Cable Length
Refer to Technical Specifications - Kinetix 6000M Integrated Drive-Motor Cables on page 66.

Cable Type
AA = Standard

Down-stream Connector Type
SS = Kinetix 6000M network cable, straight, socket
RS = Kinetix 6000M network cable, right-angle, socket

Up-stream Connector Type
SP = Kinetix 6000M network cable, straight, pin
RP = Kinetix 6000M network cable, right-angle, pin

Cable Type
NS = Kinetix 6000M network

Accessory Component
C = Cable

Bulletin Number

Kinetix 6000M Integrated Drive-Motor Replacement Parts

Cat. No.	**Description**
2094-XNIPIM-1	Replacement connectors for the IPIM module, includes hybrid DC bus, hybrid communication, safe-off, and enable input
2094-SEPM-FUSE	Replacement fuses for the IPIM module, 6 each, Bussmann part number FWP-50A14Fa
MDF-SB-NODECVR	Replacement covers for the node address switches on the IDM units
1485-M12	Replacement covers for the digital input connectors on the IDM units
2090-CTHP8	Replacement hybrid terminator (hybrid terminator is included with each Kinetix 6000M IPIM module)
2090-CTSRP	Replacement network terminator (network terminator is included with each Kinetix 6000M IPIM module)

Kinetix 6000M Hybrid Cables

Kinetix 6000M hybrid cables provide power, control, and communication between the IDM power interface module (IPIM) and the integrated drive-motor (IDM) units. Kinetix 6000M hybrid cables are available in lengths up to 25 m (82 ft). The maximum combined cable length for all axes daisy-chained from the same IPIM module is 100 m (328 ft). Maximum length for daisy chain is reduced by IDM units with holding brakes and number of IDM inputs used. Refer to Motion Analyzer software, version 6.00 or later, to verify that maximum daisy-chain length is not exceeded. The last IDM unit requires a 2090-CTHP8 hybrid bus terminator (included with each IPIM module).

Typical Hybrid Cable Application

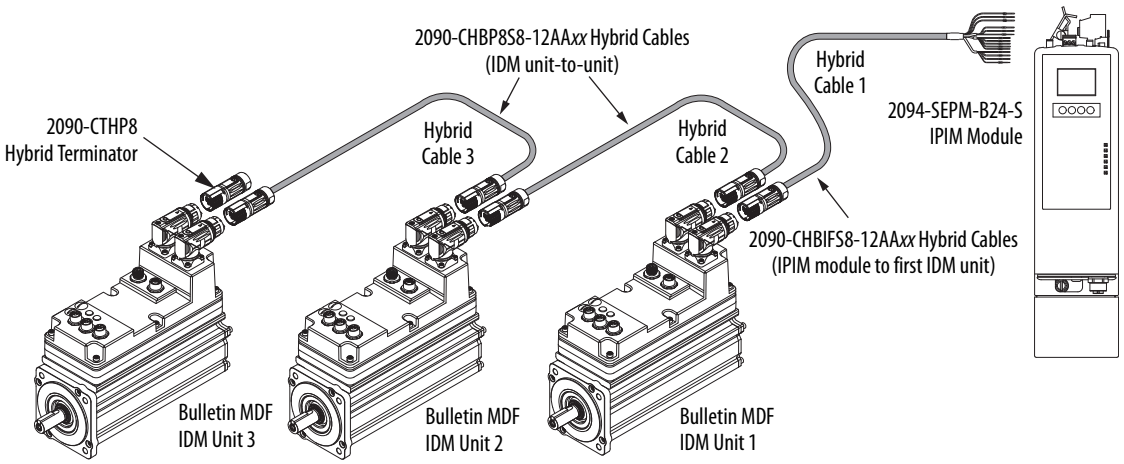

For example, in this Kinetix 6000M system, if each cable length was the maximum 25 m (82 ft), the combined cable length would be 75 m (246 ft).

Kinetix 6000M Hybrid Cable Descriptions

Cable Cat. No.	Description	Cable Configuration	
		Flying-lead/Pin	Socket
2090-CHBIFS8-12AA*xx* (1)	From IPIM module (flying-leads) to the first IDM unit • IPIM-end flying-leads (IF) • SpeedTec connector, socket (S8)	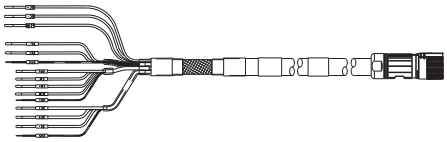	
2090-CHBP8S8-12AA*xx* (2)	IDM unit-to-unit • SpeedTec connector, pin (P8) • SpeedTec connector, socket (S8)	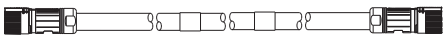	
2090-CBKS8-16AA03	Manual brake release • Brake release wires (BK) • SpeedTec connector, socket (S8)	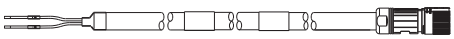	
2090-CCPP8S8	Coupler cable that connects between two hybrid cables to bypass an IDM unit • SpeedTec connector, pin (P8) • SpeedTec connector, socket (S8)	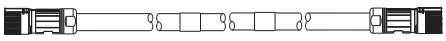	
2090-KPB47-12CF (3)	• The hybrid bulkhead adapter secures cables as they pass through the cabinet • Mating cable attaches on the other side	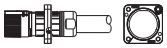	
2090-CTHP8	Hybrid (SpeedTec) terminator • Required on last IDM unit, pin (P8) • Included with each IPIM module		

(1) Cables are available in standard lengths of 1, 2, 3, 4, 5, 7, 9, 12, 15, 20, and 25 m (3.2, 6.6, 9.8, 13.1, 16.4, 22.9, 29.5, 39.3, 49.2, 65.5, and 82.0 ft).
(2) Cables are available in standard lengths of 0.5, 1, 2, 3, 4, 5, 7, 9, 12, 15, 20, and 25 m (1.6, 3.2, 6.6, 9.8, 13.1, 16.4, 22.9, 29.5, 39.3, 49.2, 65.5, and 82.0 ft).
(3) For 2090-KPB47-12CF bulkhead adapter dimensions and specifications, refer to 2090-Series Bulkhead Adapter Kits on page page 51.

Kinetix 6000M Network Cables

Kinetix 6000M network cables provide motion commands to the IDM units. Kinetix 6000M network cables are available in lengths up to 25 m (82 ft). The maximum combined cable length for all axes daisy-chained from the same IPIM module is 100 m (328 ft).

Typical Kinetix 6000M Network Cable Application

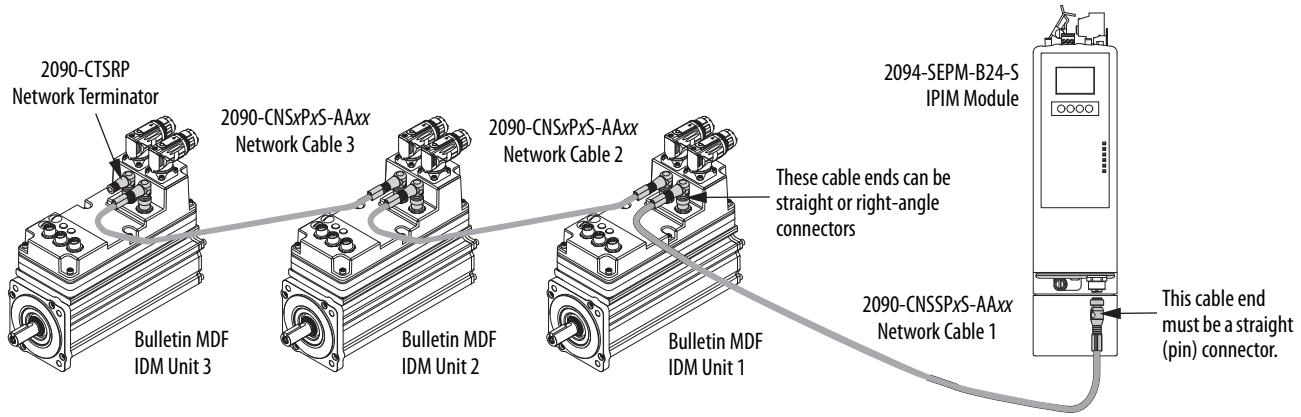

For example, in this Kinetix 6000M system, if each cable length was the maximum 25 m (82 ft), the combined cable length would be 75 m (246 ft). The last IDM unit requires a 2090-CTSRP network terminator.

Kinetix 6000M Network Cables

Cat. No.	Description	Cable Configuration Pin Socket
2090-CNSSPSS-AA*xx* (1)	• Straight connector, pin (SP) • Straight connector, socket (SS)	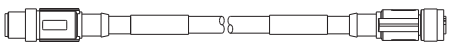
2090-CNSRPRS-AA*xx* (1)	• Right-angle connector, socket (RP) • Right-angle connector, socket (RS) • Not compatible for connection to the IPIM module	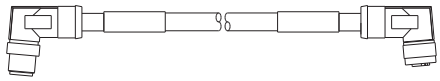
2090-CNSRPSS-AA*xx* (1)	• Right-angle connector, socket (RP) • Straight connector, socket (SS) • Not compatible for connection to the IPIM module	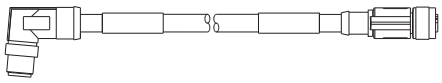
2090-CNSSPRS-AA*xx* (1)	• Straight connector, pin (SP) • Right-angle connector, socket (RS)	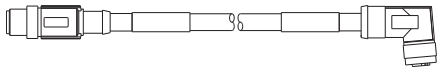
2090-CBUSPSS	• The network cable bulkhead adapter feeds signals through the cabinet wall • Network cables attach on either side	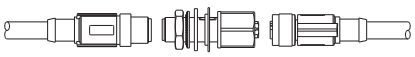
2090-CTSRP	Network terminator • Required on last IDM unit, right-angle, socket (RP) • Included with each IPIM module	

(1) Cables are available in standard lengths of 0.5, 1, 2, 3, 4, 5, 7, 9, 12, 15, 20, and 25 m (1.6, 3.2, 6.6, 9.8, 13.1, 16.4, 22.9, 29.5, 39.3, 49.2, 65.5, and 82.0 ft).

IMPORTANT Right-angle (pin) connectors are not compatible for connection to the IPIM module. Only straight (pin) connectors fit properly.

Digital Input Cables

Kinetix 6000M IDM units have three 5-pin, M12, digital input connectors. Allen-Bradley (Bulletin 889D and 879D) DC micro-style patchcords, splitters, and V-cables are available with straight and right-angle connectors for making connections from the IDM unit to input sensors. Refer to the Kinetix 6000 and Kinetix 6200/6500 Drive Systems Design Guide, publication KNX-RM003, for examples.

Digital Input Accessories Items

Cat. No.	Item Type	Description	Cable Configuration Socket — Pin (IDM unit)
889D-F4ACDM-*x*	Digital input patchcords [1] • IDM unit to NC and NO sensors • IDM unit to V-cable • V-cable to NO sensors	• Straight connector, socket (F) • Straight connector, pin (M)	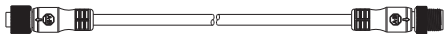
889D-R4ACDM-*x*		• Right-angle connector, socket (R) • Straight connector, pin (M)	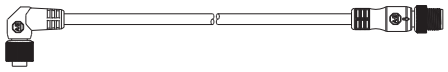
889D-F4ACDE-*x*		• Straight connector, socket (F) • Right-angle connector, pin (E)	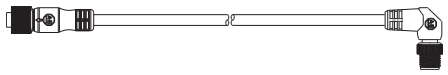
889D-R4ACDE-*x*		• Right-angle connector, socket (R) • Right-angle connector, pin (E)	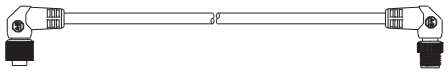
889D-F4ACDM-V*x*	Digital input patchcords [1] (V-cable to NC sensor)	• Straight connector, socket (F) • Straight connector, pin (M)	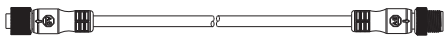
889D-R4ACDM-V*x*		• Right-angle connector, socket (R) • Straight connector, pin (M)	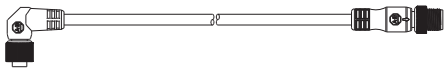
889D-F4ACDE-V*x*		• Straight connector, socket (F) • Right-angle connector, pin (E)	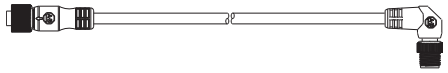
889D-R4ACDE-V*x*		• Right-angle connector, socket (R) • Right-angle connector, pin (E)	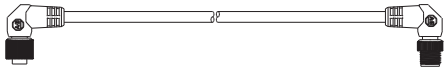
879D-F4ACDM-*x*	V-cables [2]	• Straight connectors, socket (F) • Straight connector, pin (M)	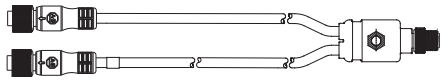
879D-R4ACDM-*x*		• Right-angle connectors, socket (R) • Straight connector, pin (M)	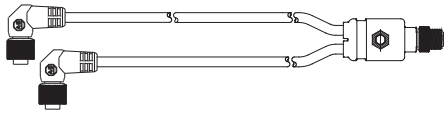
879D-F4DM	Splitter [3]	• Straight connectors, socket (F) • Straight connector, pin (M)	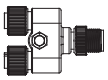

(1) Patchcords are available in standard lengths of 2, 5, and 10 m (6.6, 16.4, and 32.8 ft).
(2) V-cables are available in standard lengths of 0.3, 1, 2, and 5 m (1.0, 3.2, 6.6, and 16.4 ft).
(3) Splitter can be used in place of the V-cable.

For patchcord cable specifications see Cord Sets and Field Attachables Technical Data, publication 889-TD002.

Technical Specifications - Kinetix 6000M Integrated Drive-Motor Cables

Hybrid Cable Specifications

Cable Cat. No.	Cable Type/ Jacket Color	Description	Wire Size AWG	Weight, approx kg/m (lb/ft)	Standard Cable Lengths m (ft)
2090-CHBIFS8-12AA*xx* (1)	Hybrid cable, Industrial, Orange (DESINA, RAL 2003)	• Power/signal/communication composite cable, shielded • (UL) PLTC-ER • FT4 flame rating • AWM, 1000V, 105 °C • Sun resistant, oil and water resistant	12, 16, 22	0.36 (0.25)	P5 = 0.5 (1.6) 07 = 7.0 (22.9) 01 = 1.0 (3.2) 09 = 9.0 (29.5) 02 = 2.0 (6.5) 12 = 12 (39.4) 03 = 3.0 (9.8) 15 = 15 (49.2) 04 = 4.0 (13.1) 20 = 20 (65.6) 05 = 5.0 (16.4) 25 = 25 (82.0)
2090-CHBP8S8-12AA*xx*					
2090-CCPP8S8					01 = 1.0 (3.2)
2090-CBKS8-16AA03		Two conductor, 600V, cable for motor brake	18	0.12 (0.08)	03 = 3.0 (9.8)

(1) Not available in 0.5 (1.6) cable length (2090-CHBIFS8-12AAP5 is not a valid catalog number).

Network Cable Specifications

Cable Cat. No.	Cable Type/ Jacket Color	Description	Wire Size AWG	Weight, approx kg/m (lb/ft)	Standard Cable Lengths m (ft)
2090-CNSSPSS-AA*xx*	Network cable, Industrial, Violet (DESINA, RAL 4001)	• Industrial network cable, shielded • (UL) PLTC-ER, • Meets or exceeds Data Master/Category 5e Patch Cable electrical characteristics • VW-1 flame rating • AWM, 1000V, 80 °C, Type CMR, c(UL) Type CMG • Sun resistant, oil resistant	22	0.10 (0.068)	P5 = 0.5 (1.6) 07 = 7.0 (22.9) 01 = 1.0 (3.2) 09 = 9.0 (29.5) 02 = 2.0 (6.5) 12 = 12 (39.4) 03 = 3.0 (9.8) 15 = 15 (49.2) 04 = 4.0 (13.1) 20 = 20 (65.6) 05 = 5.0 (16.4) 25 = 25 (82.0)
2090-CNSRPRS-AA*xx*					
2090-CNSSPRS-AA*xx*					
2090-CNSRPRS-AA*xx*					

Dimensions - Kinetix 6000M Hybrid Cables

When installing hybrid cable runs, be careful not to stress the cable by making bends too sharp. Refer to the table below for bend radius definitions and the dimension diagrams that follow when routing cables during system installation.

Hybrid and Network Cable Bend Radius Definitions

Type of Bend Radius	Type of Cable	Description
Static bend radius	Standard (non-flex)	The static (installation) bend radius and dimension B are 7 times the cable diameter: • Do not begin a static bend inside dimension B. • Use this measurement when routing the cable in a non-flex application between IDM units (the bend area). – The bend area is where standard (non-flex) cables can be bent to their specified bend radius.

Hybrid Cable Dimensions

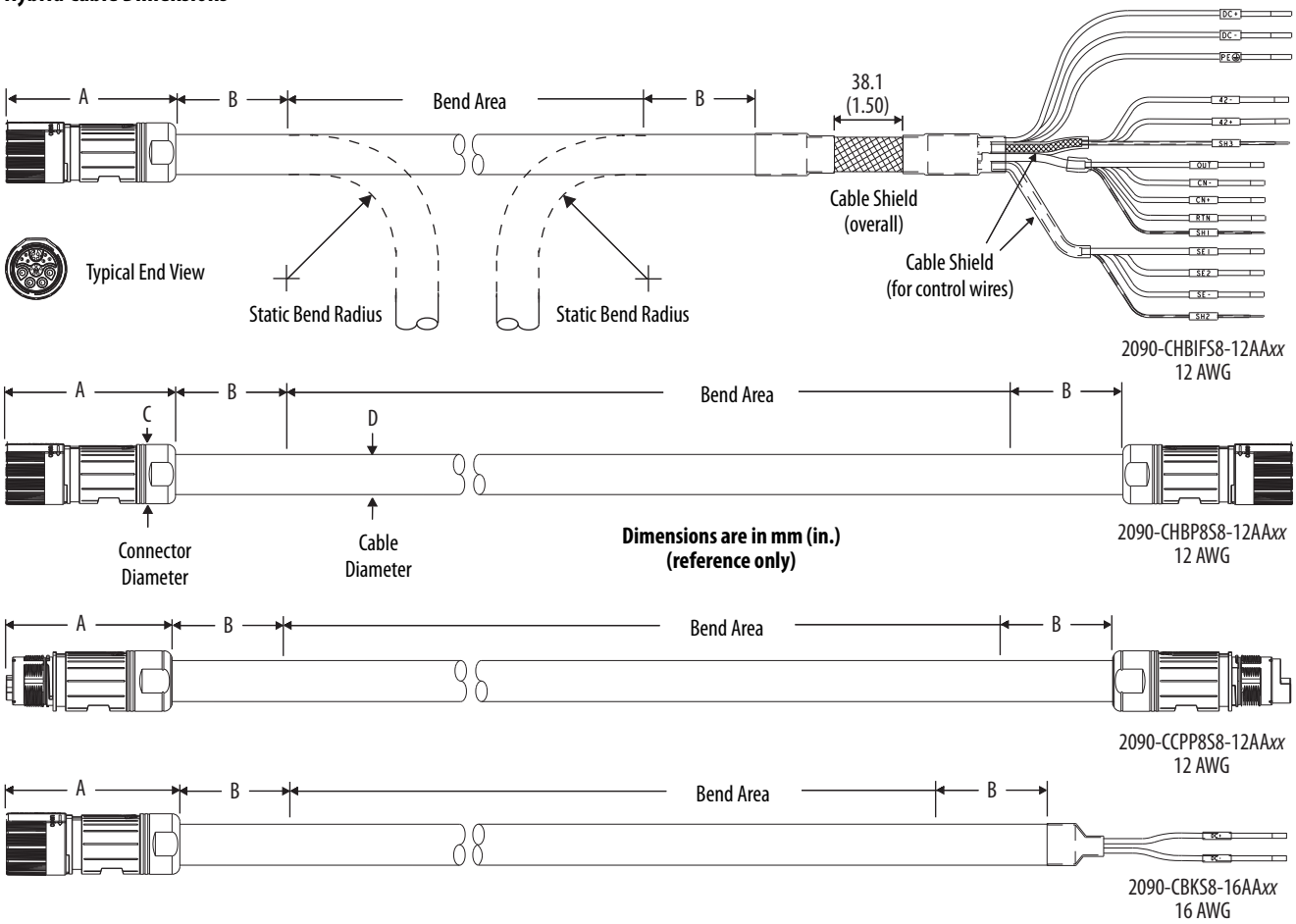

Hybrid Cable Dimensions

Hybrid Cable Cat. No.	A mm (in.)	B [1] mm (in.)	C mm (in.)	D mm (in.)
2090-CHBIFS8-12AA*xx*	76.0 (3.0)	99.4 (3.9)	25.4 (1.0)	14.2 (0.5)
2090-CHBP8S8-12AA*xx*				
2090-CCPP8S8				
2090-CBKS8-16AA03		56.7 (2.2)		8.1 (0.3)

(1) Dimension B is based on the cable diameter.

Dimensions - Kinetix 6000M Network Cables

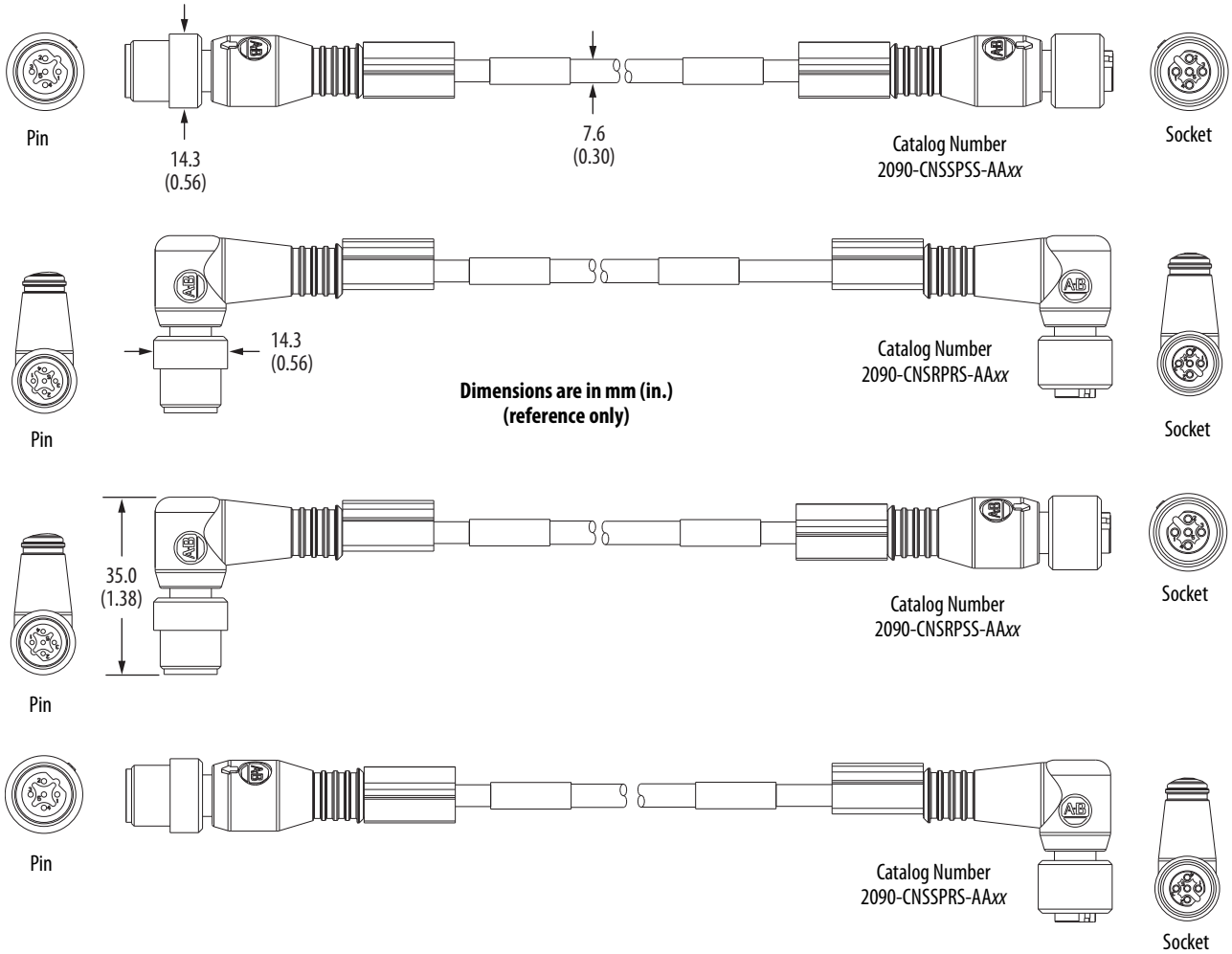

Dimensions - Kinetix 6000M Network Bulkhead Adapter

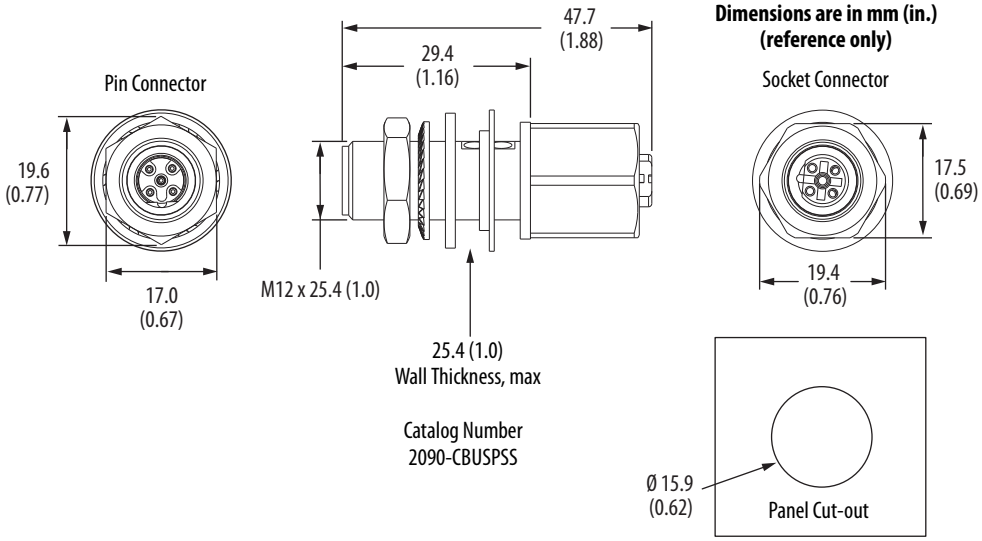

Breakout Components and Connector Kits

This section contains examples, descriptions, dimensions, specifications, and catalog numbers for breakout components and connector kits.

Low-profile Connector Kits

Use these examples to identify the best solution for wiring flying-lead feedback and I/O cables to servo drives or line interface modules (LIM).

In this example, the Kinetix 2000 (IAM/AM) is shown with catalog number 2090-K2CK-D15M, for use with the motor feedback (MF) connector. Also shown is catalog number 2090-K2CK-COMBO for use with the motor feedback (MF) and I/O (IOD/AF) connectors. Refer to Low-profile Connector Kit Components on page 71 for more information.

Kinetix 2000 (IAM/AM) and Kinetix 300/350 Examples

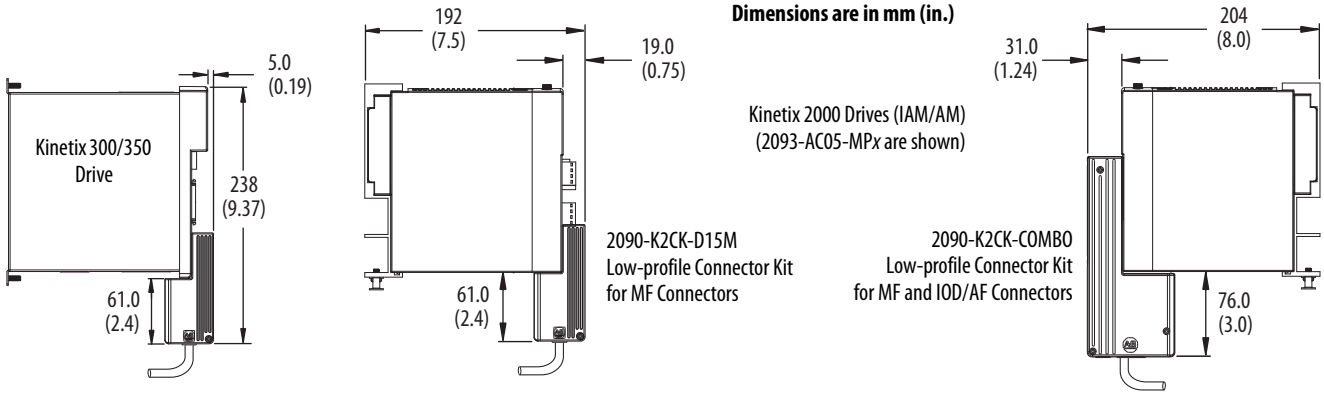

In this example, the Kinetix 6000 and Kinetix 7000 drives are shown with low-profile connector kits (catalog numbers 2090-K6CK-D*xxx*). Use these kits with the I/O (IOD), motor feedback (MF), and auxiliary feedback (AF) connectors. The 2090-K6CK-D*xxx* kits also apply to the Kinetix 6200 and Kinetix 6500 drives. The Refer to Low-profile Connector Kit Components on page 71 for more information.

Kinetix 6000, Kinetix 6200, Kinetix 6500, and Kinetix 7000 Low-profile Connector Examples

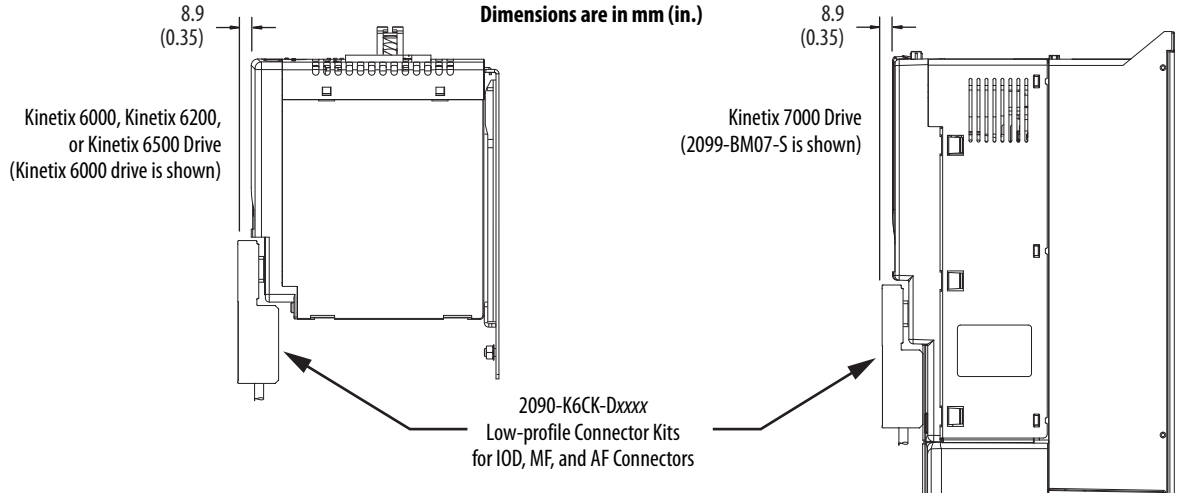

In this example, the LIM module is shown with low-profile connector kit (catalog number 2090-K6CK-D26M). Use this connector with the I/O (IOL) connector on the 2094-AL09 and 2090-BL02 LIM modules. Refer to Low-profile Connector Kit Components on page 71 for more information.

LIM Module Low-profile Connector Example

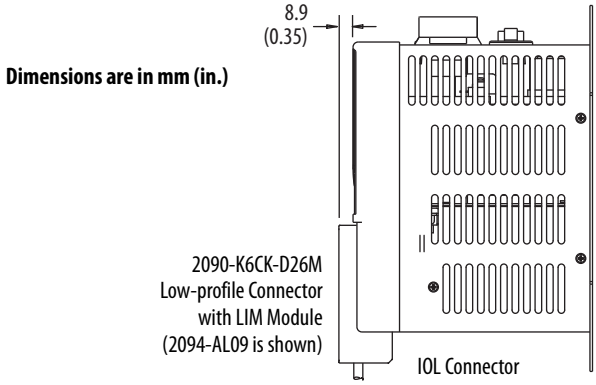

Catalog Numbers - Low-profile Connector Kits

Catalog numbers consist of various characters, each of which identifies a specific option for that component. Use the catalog numbering chart below to understand the configuration of your component.

2090 - KxCK - *xxxxx*

Connector Type
D15M = 15-pin, male, D-sub, for motor feedback
D15F = 15-pin, female, D-sub, for auxiliary feedback
D15MF = 15-pin, male, with filter, D-sub, for motor feedback
D26M = 26-pin, male, D-sub, for I/O
D44M = 44-pin, D-sub, for I/O, safety, and auxiliary feedback
D44S0 = 44-pin, D-sub, for I/O and cascading safe torque-off signals
COMBO = 15-pin and 44-pin, D-sub, for feedback and I/O
KENDAT = 15-pin, D-sub, used to enable operation of drives with EnDat feedback

Drive
K2CK = Kinetix 2000 and Kinetix 300/350 drives
K6CK = Kinetix 6000, Kinetix 6200/6500, or Kinetix 7000 drives, and LIM modules (2094-AL09 and 2094-BL02 only)
K7CK = Kinetix 7000 drives

Bulletin Number

Low-profile Connector Kit Components

Low-profile connector kits are designed for use with the Kinetix 300/350, Kinetix 6000, Kinetix 6200/6500, Kinetix 2000, and Kinetix 7000 drives, and LIM modules. Use this table to identify the low-profile connector kit for your feedback or I/O connector.

IMPORTANT The flying-lead compatible cables listed below require connector kits to complete feedback and I/O connections to the drive.

Cat. No.	Description	Cable Compatibility
2090-K2CK-D15M	Low-profile connector kit for motor feedback (15-pin, male, D-sub). Use with any Kinetix 2000 IAM/AM module or Kinetix 300/350 drive and compatible motors with incremental or high-resolution feedback. Does not include 3.6V battery (catalog number 2090-DA-BAT2) required for use with TLY-A*xxxx*-B high-resolution motors and 17-bit encoders.	2090-XXNFMF-S*xx* 2090-CFBM4DF-CDAF*xx* 2090-CFBM7DF-CEAA*xx* 2090-CFBM7DF-CEAF*xx* 2090-CFBM7DF-CDAF*xx* 2090-CFBM6DF-CBAA*xx*
2090-K2CK-COMBO	Low-profile connector kit for motor feedback (15-pin, male, D-sub) and I/O (44-pin, male, D-sub). Use with any Kinetix 2000 IAM/AM module and compatible motors with incremental or high-resolution feedback. Does not include 3.6V battery (catalog number 2090-DA-BAT2) required for use with TLY-A*xxxx*-B high-resolution motors and 17-bit encoders. The 2090-K2CK-COMBO kit, mounted on the Kinetix 2000 (IAM/AM) drive, fits in a standard 10 in. enclosure.	
2090-K6CK-D15M	Low-profile connector kit for motor feedback (15-pin, male, D-sub). Use with any Kinetix 6000, Kinetix 6200/6500, or Kinetix 7000 drive and compatible motors with incremental or high-resolution feedback.	
	Low-profile connector kit for motor feedback (15-pin, male, D-sub). Use with any Kinetix 6000 IAM/AM module and MPL-B*xxxx*-R or MPM-A/B*xxxxx*-2 (resolver feedback) motors.	2090-CFBM7DF-CEAA*xx* 2090-CFBM7DF-CEAF*xx*
2090-K6CK-D15F	Low-profile connector kit for auxiliary feedback (15-pin, female, D-sub). Use with any Kinetix 6000 IAM/AM module or Kinetix 7000 drive auxiliary feedback application.	Customer supplied
2090-K6CK-D26M	Low-profile connector kit for I/O (26-pin, male, D-sub). For use with any Kinetix 6000 IAM/AM module, Kinetix 7000 drive, or 2094-AL09 and 2094-BL02 LIM module.	
2090-K6CK-D44M	Low-profile connector kit for I/O, safety, and auxiliary feedback (44-pin, male, D-sub). For use with any Kinetix 6200 or Kinetix 6500 control module.	
2090-K6CK-D44S0	Low-profile connector kit for I/O and cascading safe torque-off signals (44-pin, male, D-sub). For use with any Kinetix 6200 or Kinetix 6500 (safe torque-off, -S0 control module). Refer to Kinetix 6200 and Kinetix 6500 Safe-off Components on page 95 for example diagrams.	2090-CS0DSDS-AA*xx*

Dimensions - Low-profile Connector Kits

Catalog Number 2090-K2CK-D15M

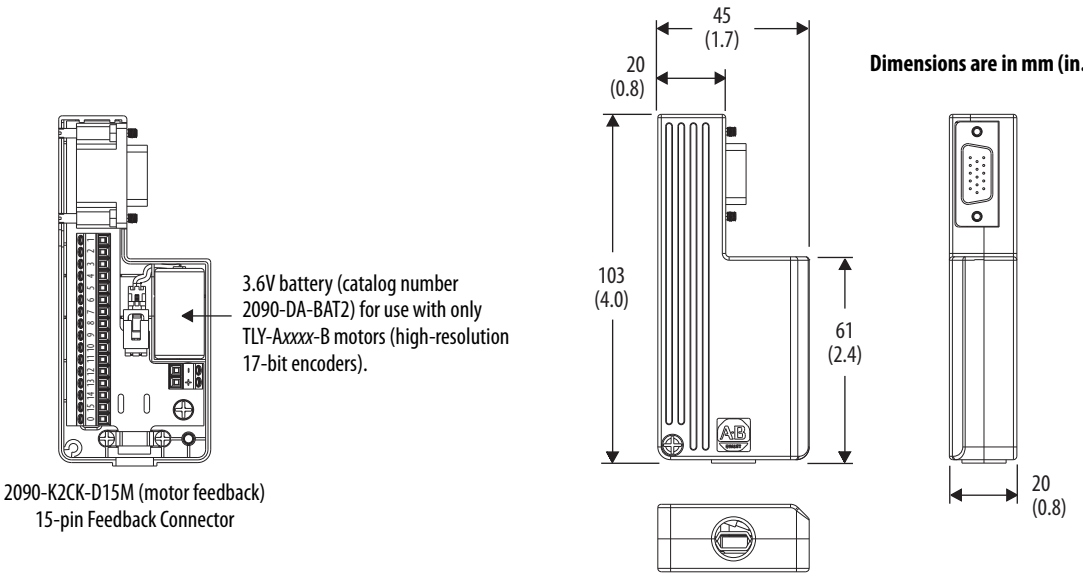

Catalog Number 2090-K2CK-COMBO

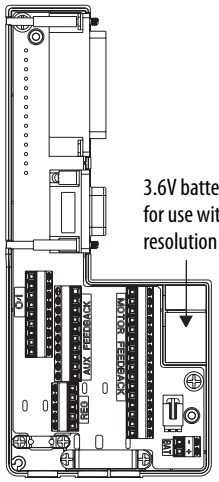

2090-K2CK-COMBO (motor feedback and I/O)
15-pin and 44-pin Connector

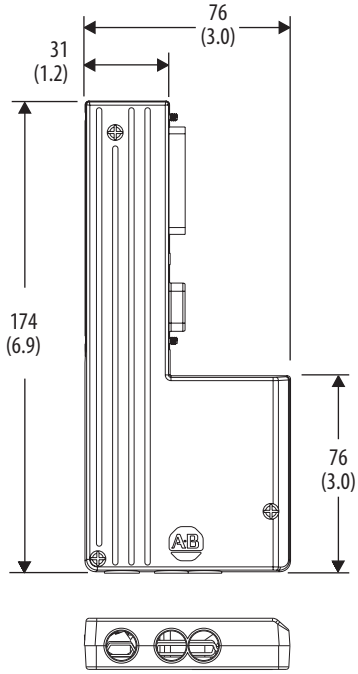

Dimensions are in mm (in.)

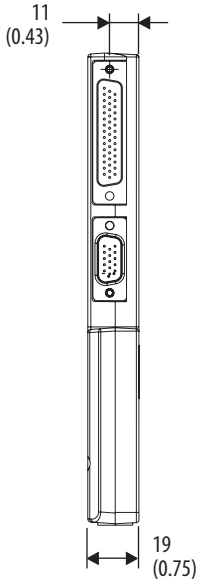

Catalog Number 2090-K6CK-D44M

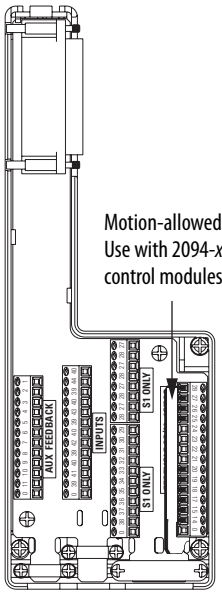

2090-K6CK-D44M
(auxiliary feedback, safety, and I/O)
44-pin Connector

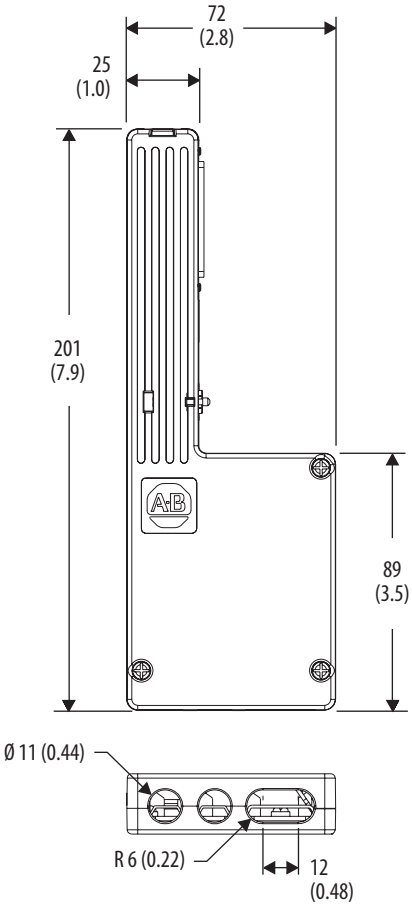

Dimensions are in mm (in.)

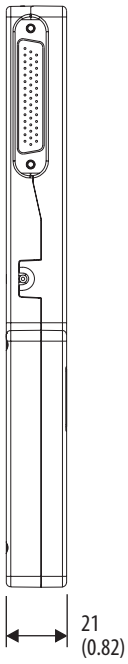

Catalog Number 2090-K6CK-D44S0

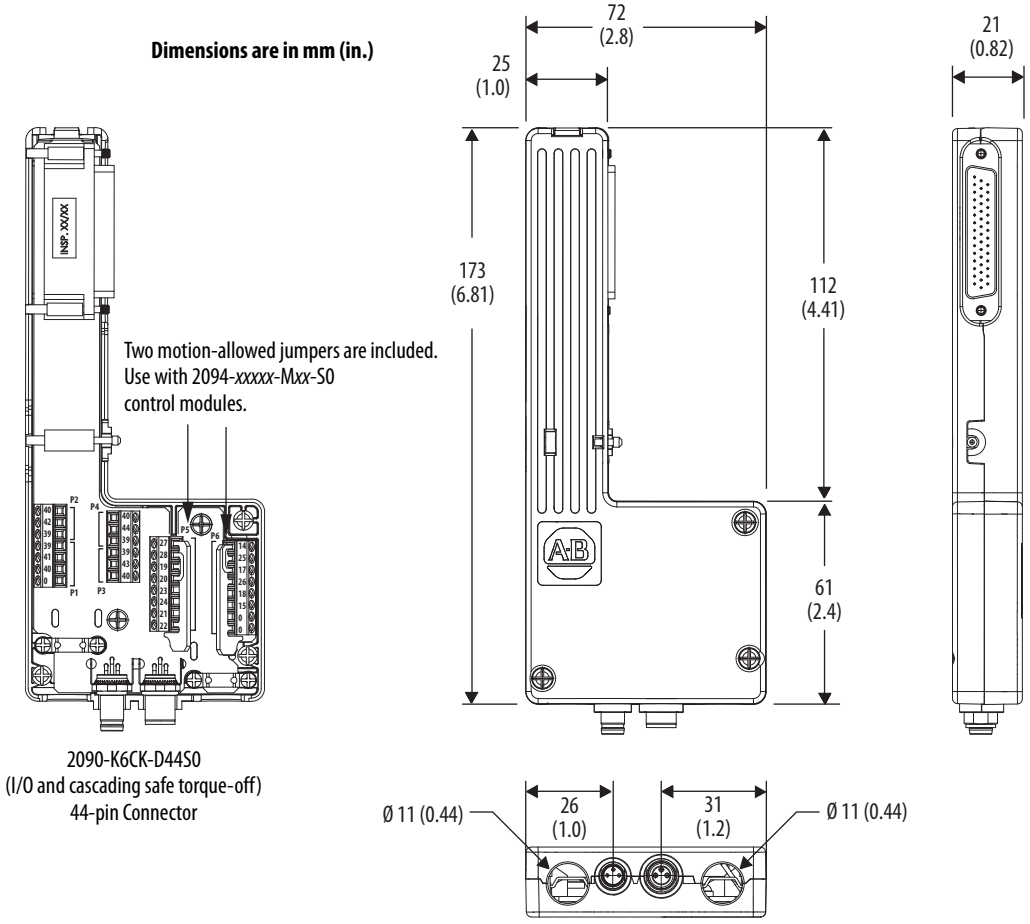

Catalog Numbers 2090-K6CK-D26M, 2090-K6CK-D15M, 2090-K6CK-D15F

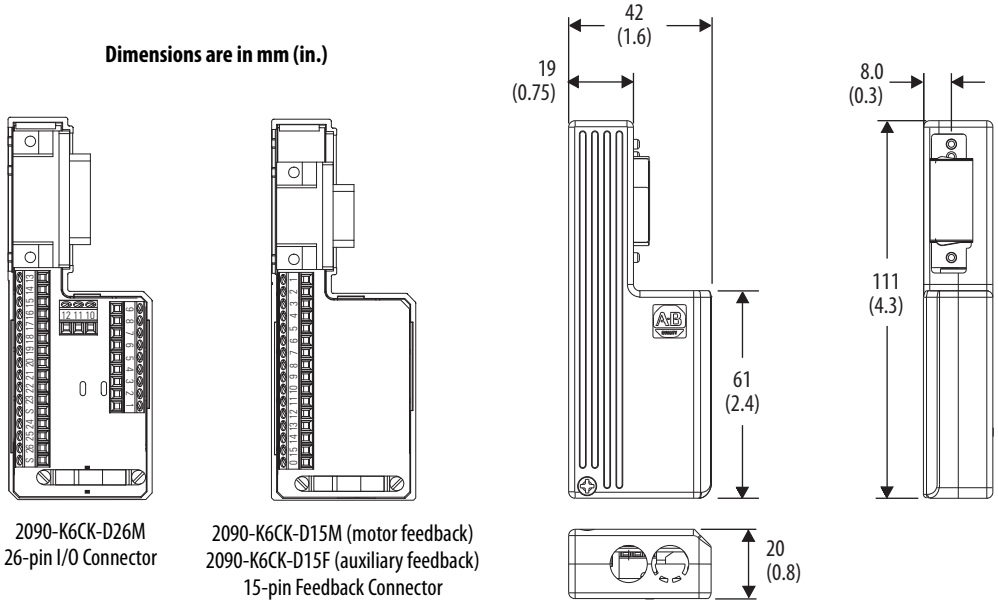

Low-profile Feedback Modules

These low-profile feedback modules are designed for use with the Kinetix 6000 and Kinetix 7000 servo drives.

Cat. No.	Description	Cable Compatibility
2090-K6CK-KENDAT	Low-profile feedback module (15-pin, male, D-sub) used to enable operation of drives with EnDat feedback. Use with any Kinetix 6000 IAM/AM module and compatible motors with EnDat encoders.	2090-XXNFMF-S*xx* 2090-CFBM4DF-CDAF*xx* 2090-CFBM7DF-CDAF*xx*
2090-K7CK-KENDAT	Low-profile feedback module (15-pin, male, D-sub) used to enable operation of drives with EnDat feedback. Use with any Kinetix 7000 drive and compatible motors with EnDat encoders.	

Dimensions - Low-profile Feedback Modules

Catalog Number 2090-K*x*CK-KENDAT

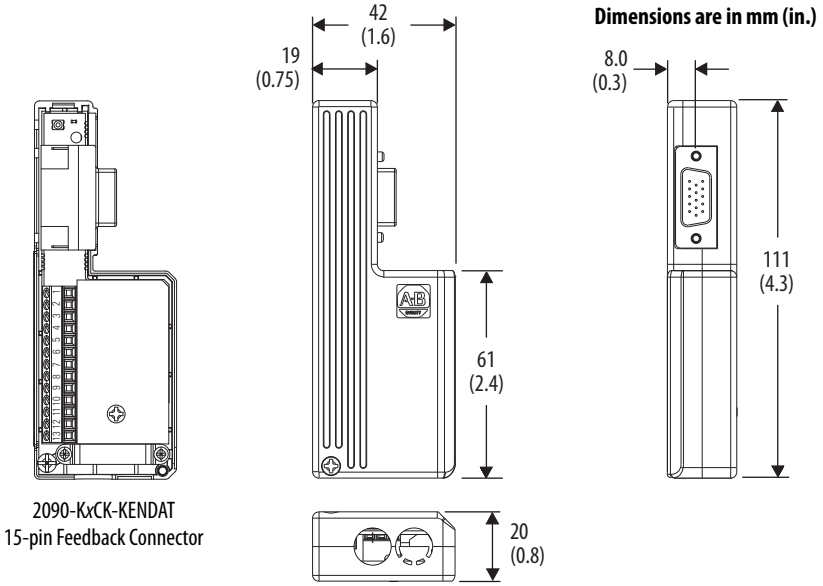

Drive-mounted Breakout Board Kits

In this example, the Kinetix 3 drive is shown with drive-mounted breakout boards (catalog numbers 2071-TBMF and 2071-TBIO) and the Kinetix 6000 drive is shown with the 2090-UXBB-DM15 drive-mounted breakout board. Applications include the following:

- Use the 2071-TBMF breakout board with 2090-CFBM6DF-CBAA*xx* feedback cables or when your motor or actuator has high-resolution encoder feedback
- Use the 2071-TBIO breakout board for making flying-lead cable connections to twenty-four of the most commonly used terminals in the 50-pin IOD connector
- Use the 2090-UXBB-DM15 drive-mounted breakout board for making motor feedback connections to the 15-pin feedback connector

Drive-mounted Breakout Board Examples

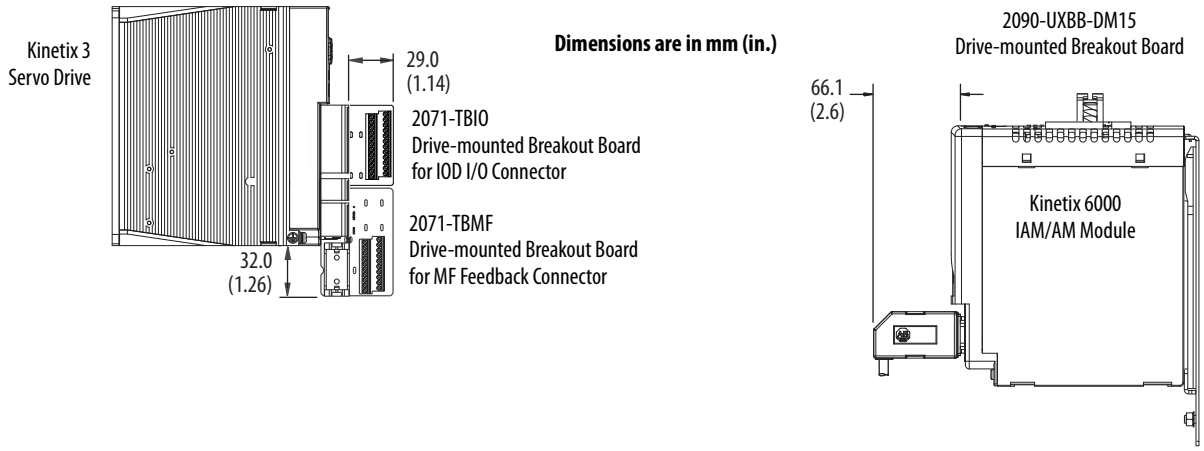

TIP The 2090-UXBB-DM15 (feedback) kit is also compatible with the Kinetix 2000 IAM/AM and Kinetix 7000 drives (MF feedback connectors only).

Drive-mounted Breakout Board Components

Use this table to identify the drive-mounted breakout board for your I/O or feedback connector.

IMPORTANT The 2090-XXNFMF-S*xx* and 2090-CFBM*x*DF-*xx*A*xxx* flying-lead feedback cables require connector kits to complete feedback connections to the drive.

Drive-mounted Breakout Boards

Cat. No.	Description
2071-TBIO	50-pin, drive-mounted breakout board for Kinetix 3 IOD I/O connector.
2071-TBMF	20-pin, drive-mounted breakout board for Kinetix 3 MF feedback connector.
2090-UXBB-DM15 (1)	15-pin, drive-mounted breakout board is compatible with Kinetix drives that are equipped with 15-pin feedback connectors.

(1) For specifications, refer to the CN2 Motor Feedback Breakout Board Installation Instructions, publication 2090-IN006.

Dimensions - Drive-mounted Breakout Boards

Drive-mounted Breakout Board Dimensions (catalog numbers 2071-TBMF and 2071-TBIO)

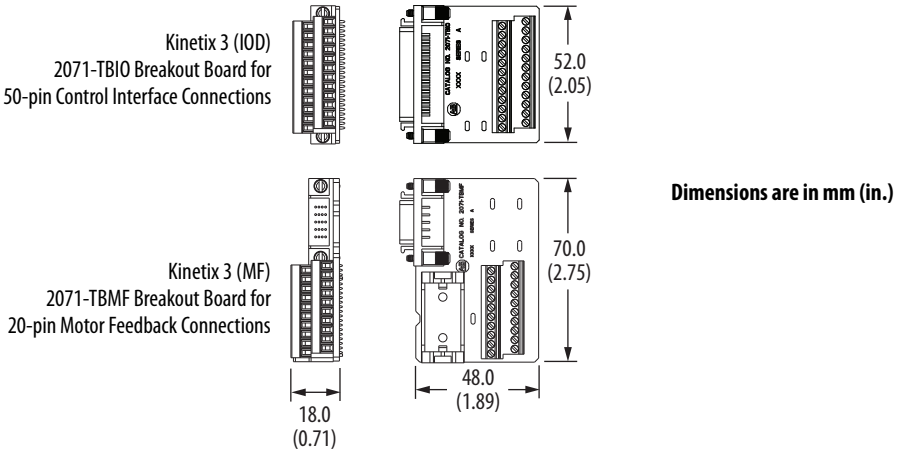

Drive-mounted Breakout Board Dimensions (catalog number 2090-UXBB-DM15)

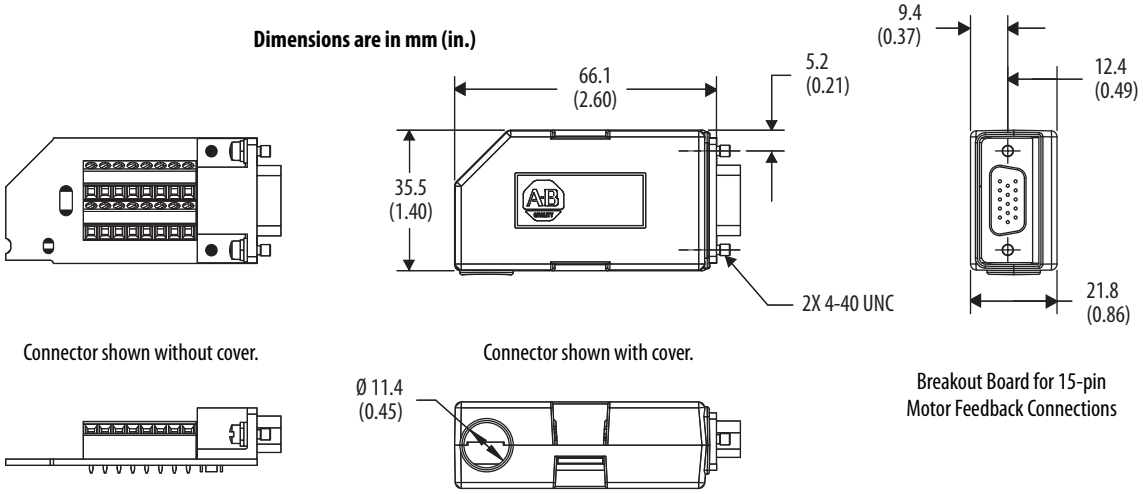

Panel-mounted Breakout Board Kits

Panel-mounted breakout board kits for motor feedback (catalog number 2090-UXBK-D15*xx*) and control interface (catalog number 2090-U3BK-D44*xx*) are designed for use with these servo drives. Refer to Panel-mounted Breakout Board Components on page 78 for more information.

Panel-mounted Breakout Board Examples

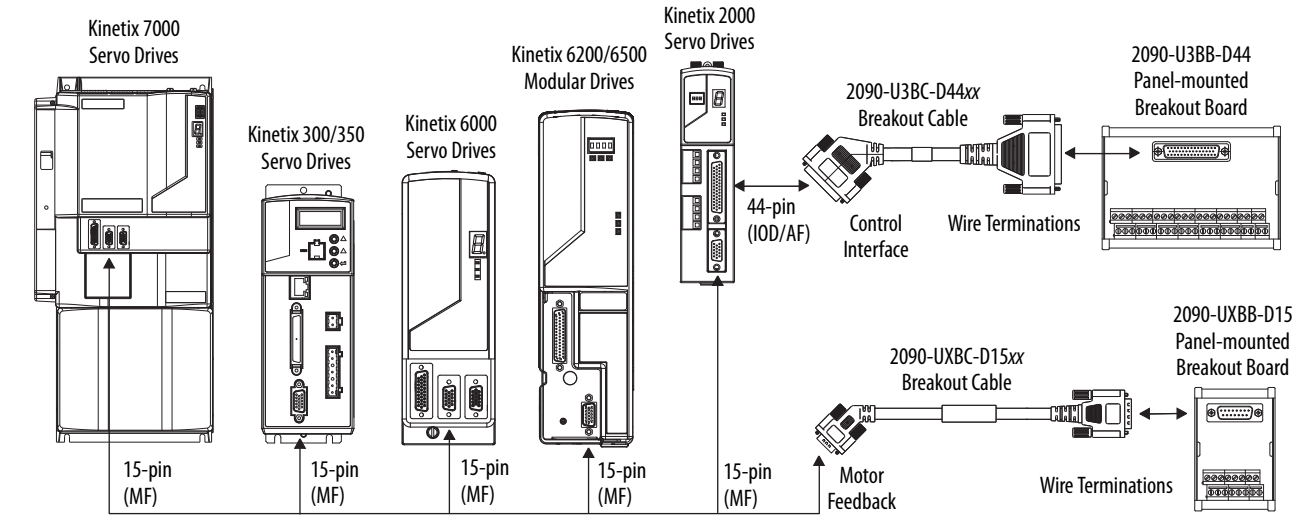

Catalog Numbers - Panel-mounted Breakout Boards

Catalog numbers consist of various characters, each of which identifies a specific option for that component. Use the catalog numbering chart below to understand the configuration of your component. For questions regarding product availability, contact your Allen-Bradley distributor.

2090 - *xx* *xx* - D*xx* *xx*

Length
Refer to Technical Specifications - 2090-Series Power and Feedback Cables beginning on page 35.
Blank = N/A

Connector Type
D44 = 44-pin, male, D-sub, 44 connections
D15 = 15-pin, male, D-sub, 15 connections

Kit Type
BK = Breakout board and cable kit
BC = Breakout cable only
BB = Breakout board only

Drive
UX = Kinetix 300/350, Kinetix 2000, Kinetix 6000, Kinetix 6200/6500, and Kinetix 7000 drives
U3 = Kinetix 2000 drives

Bulletin Number

Panel-mounted Breakout Board Components

Breakout boards, cables, and kits (designed for DIN rail mounting on the panel) and for use with Kinetix drives as specified in the description are shown below. These breakout board components can be ordered separately, or as a kit containing both terminal block and cable.

Panel-mounted Breakout Board Kits

Cat. No.	Description	Cable Compatibility
2090-UXBK-D15*xx*	DIN rail terminal block (catalog number 2090-U*x*BB-D*xx*) and cable (catalog number 2090-U*x*BC-D*xxxx*) for motor feedback connector (15-pin, male, D-sub). Use with any Kinetix 300/350, Kinetix 2000, Kinetix 6000, Kinetix 6200/6500, or Kinetix 7000 drives (MF connector) for motor feedback connections.	2090-XXNFMF-S*xx* 2090-CFBM4DF-CDAF*xx* 2090-CFBM7DF-CEAA*xx* 2090-CFBM7DF-CEAF*xx* 2090-CFBM6DF-CBAA*xx*
	Terminal block and cable for motor feedback connector (15-pin, male, D-sub). Use with Kinetix 6000 drives, MPL-B*xxxx*R, and MPM-A/B*xxxxx*-2 (resolver feedback) motors.	2090-CFBM7DF-CEAA*xx*
2090-U3BK-D44*xx*	Terminal block and cable for control interface connector (44-pin, male, D-sub). Use with Kinetix 2000 drives (IOD/AF connector).	Customer Supplied

Panel-mounted Breakout Boards

Cat. No.	Description
2090-UXBB-D15	15-pin terminal block with D-sub connector. Use with any Kinetix 300/350, Kinetix 2000, Kinetix 6000, Kinetix 6200/6500, or Kinetix 7000 drives (MF connector) for motor feedback connections.
2090-U3BB-D44	44-pin terminal block with D-sub connector. Use with Kinetix 2000 drives (IOD/AF connector) for control interface connections.

IMPORTANT The flying-lead compatible cables listed above require either 2090-UXBB-DM15 (drive-mounted) or 2090-UXBB-D15 (panel-mounted) breakout board connector kits to complete feedback and I/O connections to the drive.

Panel-mounted Breakout Cables

Cat. No.	Description
2090-UXBC-D15*xx*	15-pin cable with D-sub connector. Use with any Kinetix 300/350, Kinetix 2000, Kinetix 6000, Kinetix 6200/6500, or Kinetix 7000 drives (MF connector) for motor feedback connections.
2090-U3BC-D44*xx* (1)	44-pin cable with D-sub connector. Use with Kinetix 2000 drives (IOD/AF connector) for control interface connections.

(1) This cable does not carry the unbuffered motor encoder signals (CN1 pins 10…15). Contact your Rockwell Automation sales representative if these signals are required for your application.

Dimensions - Panel-mounted Breakout Components

Panel-mounted Breakout Board Dimensions (catalog number 2090-UXBB-D15)

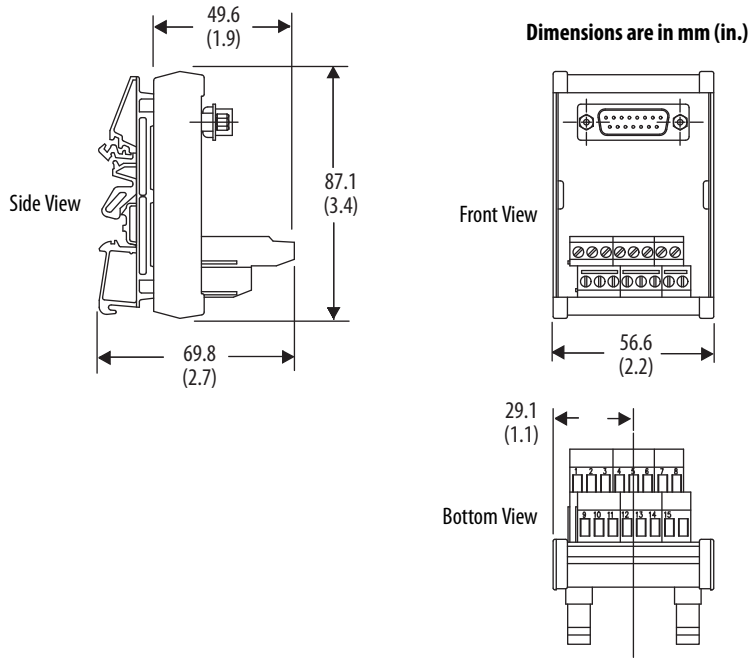

Panel-mounted Breakout Board Dimensions (catalog number 2090-U3BB-D44)

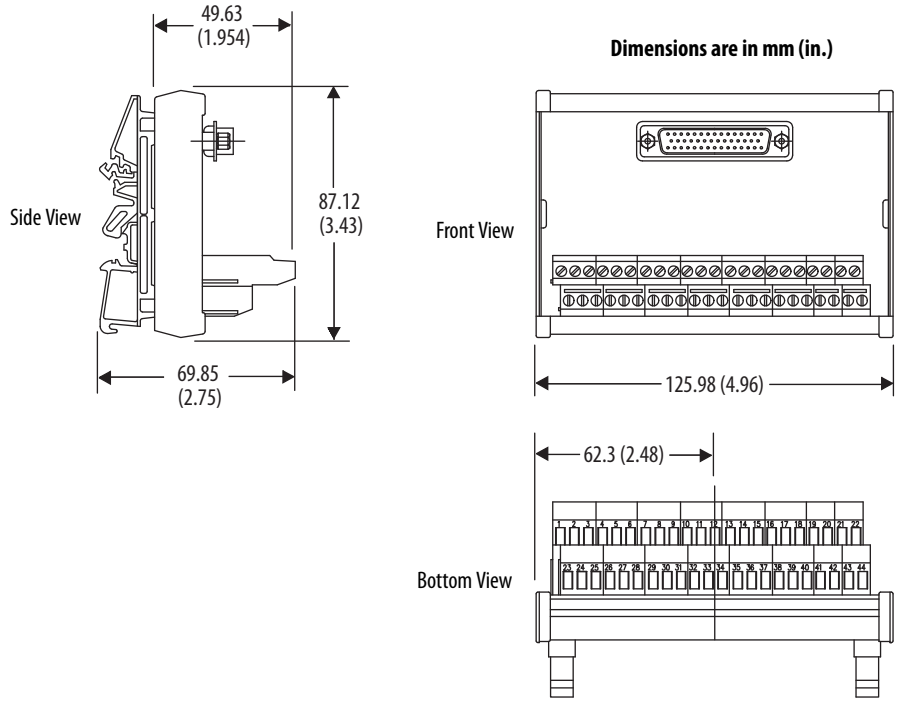

Panel-mounted Breakout Cable Dimensions (catalog number 2090-UXBC-D15*xx*)

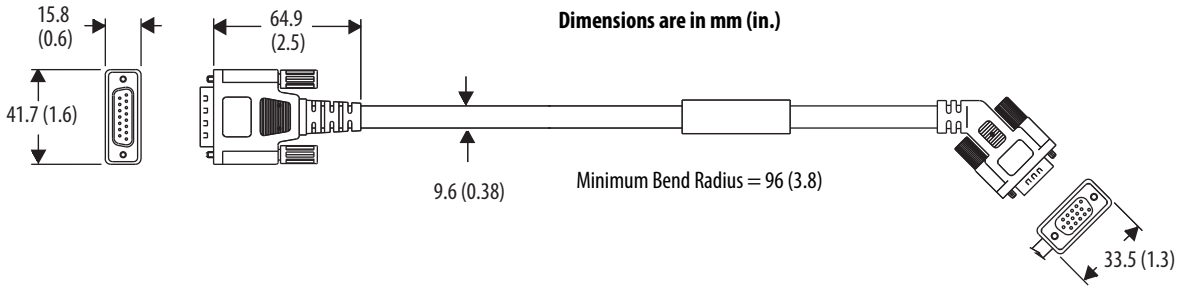

Panel-mounted Breakout Cable Dimensions (catalog number 2090-U3BC-D44*xx*)

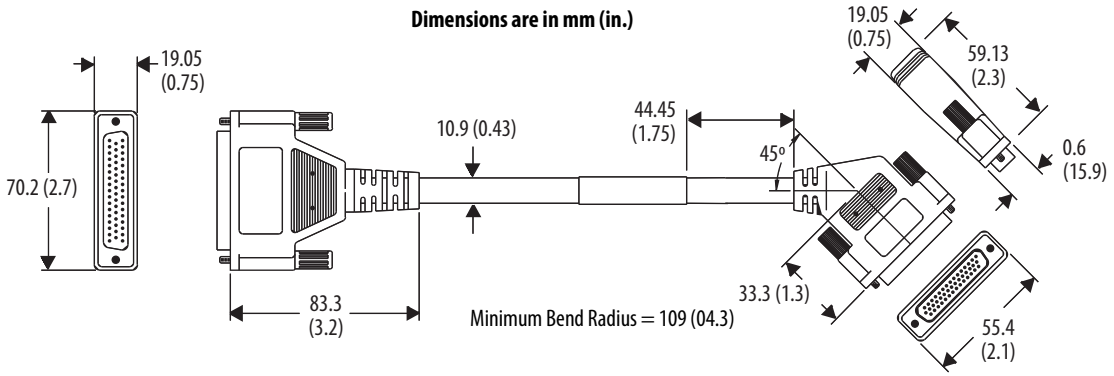

Panel-mounted Breakout Cable Specifications

Breakout Cable	Description	Specifications			Standard Cable Lengths m (ft)
		Temperature Rating	Shield Coverage	Jacket Material	
2090-UXBC-D15*xx*	15-pin, high density D-shell for Kinetix 6000 motor/ auxiliary feedback connector	90 °C (194 °F)	100% Aluminum Foil (with 85% braid overshield)	TPE	1 (3.2) 3 (9.8) 9 (29.5) 15 (49.2)
2090-U3BC-D44*xx*	44-pin, high density D-shell for Kinetix 2000 control interface connector				

Drive-end Connector Kits

Kit Cat. No.	Description	Drive Family
2090-UXCK-D15	Mating Connector Kit (15-pin high density D-shell)	Kinetix drives with compatible 15-pin feedback connectors.
2090-U3CK-D44	Mating Connector Kit (44-pin high density D-shell)	Kinetix 2000 drives
9101-1476	Mating Connector Kit (50-pin mini-D solder cup) IOD	Kinetix 3 drives
9101-1477	Mating Connector Kit (20-pin mini-D solder cup) MF	

Bulletin 2094 Power Rail

The Bulletin 2094 power rail is compatible with Kinetix 6000, Kinetix 6000M, Kinetix 6200, and Kinetix 6500 drive families. This section contains selection information, mounting dimensions, and catalog numbers for the 2094-PRS*x* (slim) power rails. Bulletin 2094 power rails are compatible with all 200V-class and 400V-class drive modules.

Catalog Numbers - Bulletin 2094 Power Rails

Power Rail Cat. No.	Description [(1)]
2094-PRS1	1 axis power rail. Bulletin 2094 IAM module without any additional drive modules.
2094-PRS2	2 axis power rail. Bulletin 2094 IAM module with up to one additional drive module.
2094-PRS3	3 axis power rail. Bulletin 2094 IAM module with up to two additional drive modules.
2094-PRS4	4 axis power rail. Bulletin 2094 IAM module with up to three additional drive modules.
2094-PRS5	5 axis power rail. Bulletin 2094 IAM module with up to four additional drive modules.
2094-PRS6	6 axis power rail. Bulletin 2094 IAM module with up to five additional drive modules.
2094-PRS7	7 axis power rail. Bulletin 2094 IAM module with up to six additional drive modules.
2094-PRS8	8 axis power rail. Bulletin 2094 IAM module with up to seven additional drive modules.

(1) Bulletin 2094 drive modules include axis modules, shunt module, and slot-filler modules.

Technical Specifications - Bulletin 2094 Power Rails

IAM, AM, and Shunt Module Slot Requirements

IAM Module Cat. No.		Converter Slot Used	Inverter Slots Used
2094-AC05-MP5-S	200V-class	1	1
2094-AC05-M01-S			1
2094-AC09-M02-S			1
2094-AC16-M03-S			1
2094-AC32-M05-S			2
2094-BC01-MP5-S 2094-BC01-MP5-M	400V-class		1
2094-BC01-M01-S 2094-BC01-M01-M			1
2094-BC02-M02-S 2094-BC02-M02-M			1
2094-BC04-M03-S 2094-BC04-M03-M			2
2094-BC07-M05-S 2094-BC07-M05-M			2
Shunt Module Cat. No.		**Converter Slot Used**	**Inverter Slots Used**
2094-BSP2	200/400V-class	0	1

AM Module Cat. No.		Converter Slot Used	Inverter Slots Used
2094-AMP5-S	200V-class	0	1
2094-AM01-S			1
2094-AM02-S			1
2094-AM03-S			1
2094-AM05-S			1
2094-BMP5-S 2094-BMP5-M	400V-class		1
2094-BM01-S 2094-BM01-M			1
2094-BM02-S 2094-BM02-M			1
2094-BM03-S 2094-BM03-M			2
2094-BM05-S 2094-BM05-M			2
IPIM Module Cat. No.		**Converter Slot Used**	**Inverter Slots Used**
2094-SEPM-B24-S	400V-class	0	1

IAM modules (catalog numbers 2094-AC32-M05-S, 2094-BC04-M03-*x*, and 2094-BC07-M05-*x*) and AM modules (catalog numbers 2094-BM03-*x* and 2094-BM05-*x*) are double-wide modules and require two slots on the power rail.

The leftmost slot on each power rail is the converter slot, which is used by only the IAM module. All other slots are inverter slots and are used by the AM, IPIM, or shunt module (refer to the figure below). The power rail catalog number indicates the number of available inverter slots.

For example, the 2094-PRS1 power rail contains one inverter slot. This limits the use of this power rail to systems requiring only one inverter slot. Similarly, the 2094-PRS8 power rail contains eight inverter slots. This limits the use of this power rail to systems requiring up to eight inverter slots.

When selecting a power rail, determine the number of inverter slots required by all rail-mounted modules and select a power rail with that minimum number of inverter slots.

IMPORTANT If you select a power rail with slots exceeding the minimum required for your system, you must install a 2094-PRF slot-filler module in each unused slot.

Power Rail Slots

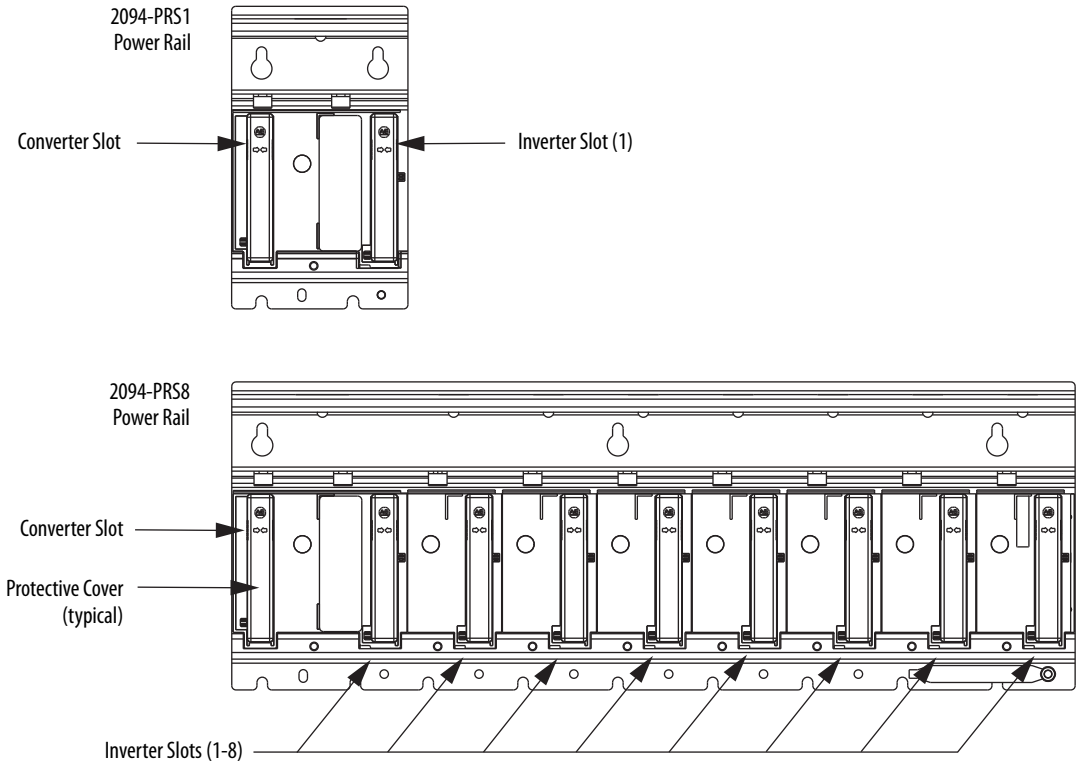

TIP The Bulletin 2094 power rails ship with a protective cover over the converter and inverter slot pins.

Dimensions - Bulletin 2094 Power Rails

Catalog Number 2094-PRS1

Dimensions are in mm (in.)

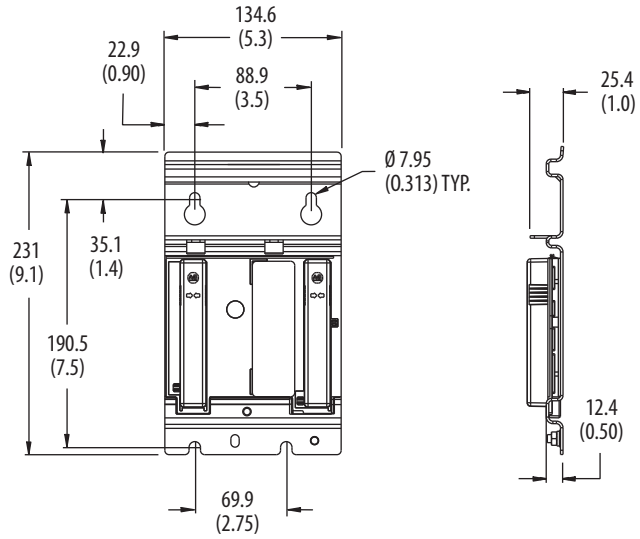

Catalog Numbers 2094-PRS2, 2094-PRS3, 2094-PRS4, 2094-PRS5, 2094-PRS6, 2094-PRS7, and 2094-PRS8

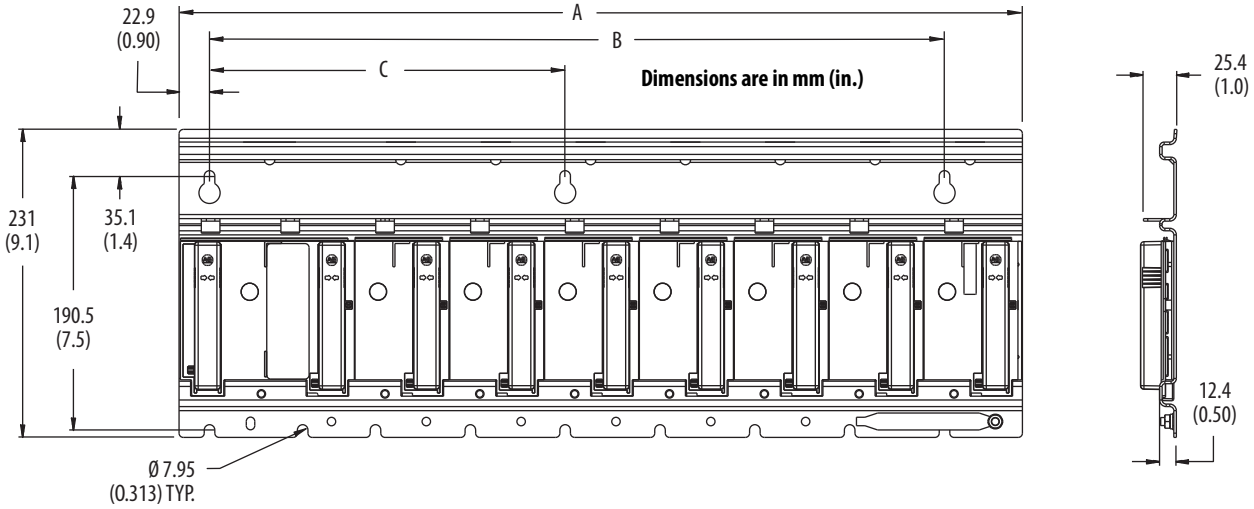

Power Rail Cat. No.	Description	Dimension A mm (in.)	Dimension B mm (in.)	Dimension C mm (in.)
2094-PRS1	Refer to figure above.			
2094-PRS2	2 axis power rail	205.7 (8.10)	124.5 (4.90)	N/A
2094-PRS3	3 axis power rail	276.9 (10.90)	195.6 (7.70)	N/A
2094-PRS4	4 axis power rail	348.0 (13.70)	266.7 (10.50)	N/A
2094-PRS5	5 axis power rail	419.1 (16.50)	337.8 (13.30)	195.6 (7.70)
2094-PRS6	6 axis power rail	490.2 (19.30)	408.9 (16.10)	195.6 (7.70)
2094-PRS7	7 axis power rail	561.3 (22.10)	480.1 (18.90)	266.7 (10.50)
2094-PRS8	8 axis power rail	632.5 (24.90)	551.2 (21.70)	266.7 (10.50)

Bulletin 2094 Shunt Module

The Bulletin 2094 shunt module (catalog number 2094-BSP2) is compatible with Kinetix 6000, Kinetix 6200, and Kinetix 6500 drive families. This section contains specifications and mounting dimensions for the Bulletin 2094 shunt module.

IMPORTANT The 2094-BSP2 shunt module is compatible with all 200V-class and 400V-class systems, however, the 2094-BSP2 shunt module is physically larger than the 200V-class drives and additional clearance is required beneath and in front of the module.

Bulletin 2094 Shunt Module Features and Indicators

Catalog Number 2094-BSP2

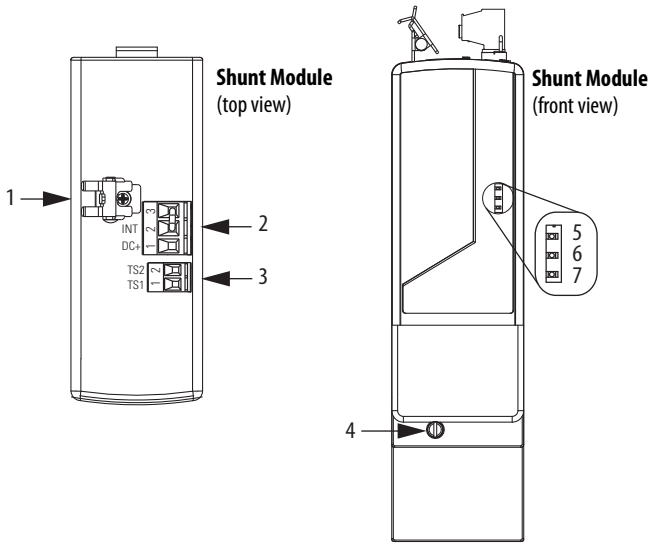

Item	Description
1	Motor cable shield clamp
2	External shunt resistor (RC) connector
3	External thermal switch (TS) connector
4	Mounting screw
5	Shunt fault status indicator
6	Over-temp fault status indicator
7	Bus status indicator

Technical Specifications - Bulletin 2094 Shunt Module

The table below lists the power specifications for the Bulletin 2094 shunt module. Refer to page 85 for tables with the Bulletin 2094 shunt module in combination with an IAM module internal shunt (when present) and the various external passive shunt resistors available for 200V-class and 400V-class drive systems. Use these tables to determine the combination you need based on the requirements of your application.

Shunt Module Power Specifications

Shunt Module Cat. No.	Drive Voltage V AC	Resistance W	Peak Power kW	Peak Current A	Continuous Power W	Capacitance µF	Short Circuit Current Rating A	Fuse Replacement
2094-BSP2	230	28.75	5.7	14	200	470	200,000 symmetrical	N/A (no internal fuse)
	460		22.5	28				

For specifications and dimensions of external shunt resistors compatible with your Kinetix 6000 or Kinetix 6200 drive, refer to External Shunt Modules beginning on page 117.

In this table, the 200V-class system specifications are given for the IAM module internal shunt resistors, the 2094-BSP2 shunt module, and the Bulletin 1394 external shunt modules.

Bulletin 2094 Shunt Module (200V-class) System Specifications

IAM Module Cat. No.	Number of Axis Modules Qty	Shunt Module Cat. No.	Specifications				External Passive Shunt Module (1)	System Continuous Shunt Power W
			Resistance W	Peak Current A	Peak Power kW	Continuous Power W		
2094-AC05-MP5-S	0…7	N/A (2)	–	–	–	–	N/A (2)	0
2094-AC05-M01-S			–	–	–	–		0
2094-AC09-M02-S			–	–	–	–		50 (3)
2094-AC16-M03-S			–	–	–	–		200 plus (4)
2094-AC32-M05-S			–	–	–	–		
2094-AC*xx*-M*xx*-S	0…6	2094-BSP2	28.75	14.1	5.7	200	N/A (2)	200 plus (5)
2094-AC*xx*-M*xx*-S	0…6	2094-BSP2	4	101.3	41	300	1394-SR9A	300 (6)
2094-AC*xx*-M*xx*-S						900	1394-SR9AF	900 (6)
2094-AC*xx*-M*xx*-S						1800	1394-SR36A	1800 (6)
2094-AC*xx*-M*xx*-S						3600	1394-SR36AF	3600 (6)

(1) Refer to External Shunt Modules beginning on page 117 for shunt module specifications.
(2) Module not part of system configuration.
(3) Shunt power equals 50 or the sum of the AM module internal shunt ratings.
(4) Shunt power equals 200 plus the sum of the AM module internal shunt ratings.
(5) Shunt power equals 200 plus the sum of the IAM module (2094-AC16-M03-S and 2094-AC32-M05-S only) and AM module internal shunt ratings.
(6) Use of external shunt module disables internal IAM/AM shunt modules.

IMPORTANT Use of the 2094-BSP2 shunt module in combination with the 2094-AC09-M02-S IAM module disables the shunt resistor internal to that IAM module. This situation is unique to the 2094-AC09-M02-S IAM module. Shunt resistors internal to adjacent AM modules are not disabled. Refer to the 200V-class Shunt Power Example shown below.

In this example, the continuous shunt power is 300 W. The 50 W resistor in the IAM module is disabled when used in combination with the 2094-BSP2 shunt module. This example is unique to the 2094-AC09-M02-S IAM module.

Shunt Power Example (catalog number 2094-AC09-M02-S)

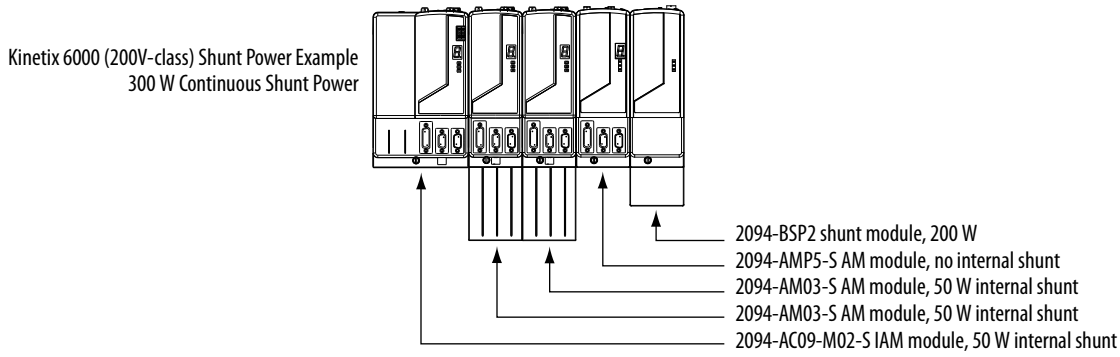

In this table, the 400V-class system specifications are given for the IAM module internal shunt resistors, the 2094-BSP2 shunt module, and the Bulletin 1394 external shunt modules.

Bulletin 2094 Shunt Module (400V-class) System Specifications

IAM Module Cat. No.	Number of Axis Modules Qty	Shunt Module Cat. No.	Specifications				External Passive Shunt Module (1)	System Continuous Shunt Power W
			Resistance W	Peak Current A	Peak Power kW	Continuous Power W		
2094-BC01-MP5-S 2094-BC01-MP5-M	0…7	N/A (2)	–	–	–	–	N/A (2)	50 plus (3)
2094-BC01-M01-S 2094-BC01-M01-M			–	–	–	–		50 plus (3)
2094-BC02-M02-S 2094-BC02-M02-M			–	–	–	–		50 plus (3)
2094-BC04-M03-S 2094-BC04-M03-M			–	–	–	–		200 plus (4)
2094-BC07-M05-S 2094-BC07-M05-M			–	–	–	–		
2094-BC*xx*-M*xx*-*x*	1…6	2094-BSP2	28.75	28	22.5	200	N/A (2)	200 plus (5)
2094-BC*xx*-M*xx*-*x*	1…6	2094-BSP2	4	201.3	162	300	1394-SR9A	300 (6)
2094-BC*xx*-M*xx*-*x*						900	1394-SR9AF	900 (6)
2094-BC*xx*-M*xx*-*x*						1800	1394-SR36A	1800 (6)
2094-BC*xx*-M*xx*-*x*						3600	1394-SR36AF	3600 (6)

(1) Refer to External Shunt Modules beginning on page 117 for shunt module specifications.
(2) Module not part of system configuration.
(3) Shunt power equals 50 or the sum of the AM module internal shunt ratings.
(4) Shunt power equals 200 plus the sum of the AM module internal shunt ratings.
(5) Shunt power equals 200 plus the sum of the IAM and AM module internal shunt ratings.
(6) Use of external shunt module disables internal IAM/AM shunt modules.

Bulletin 2094 Shunt Power Examples

In this example, the sum of the IAM, AM, and shunt modules equal 500 W of continuous shunt power. Although a 200V-class system is shown, a 400V-class IAM, AM, and shunt module power adds up the same way.

Shunt Power Example for (200V-class) Kinetix 6000 Drives (without external shunt)

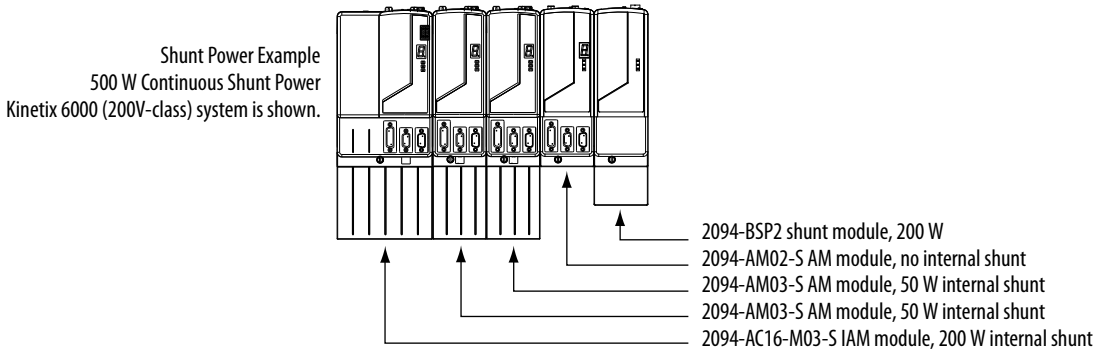

In this example, the sum of the IAM/AM modules and shunt module equal 400 W of continuous shunt power.

TIP Shunt power adds up the same way for 200V-class (IAM/AM, and shunt module) systems too.

Shunt Power Example for Kinetix 6000 Drives (without external shunt)

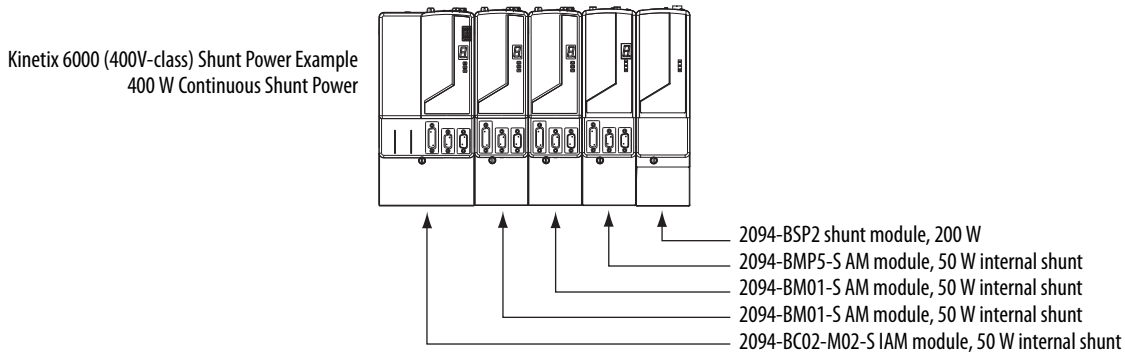

Shunt Power Example for Kinetix 6200 or Kinetix 6500 Drives (without external shunt)

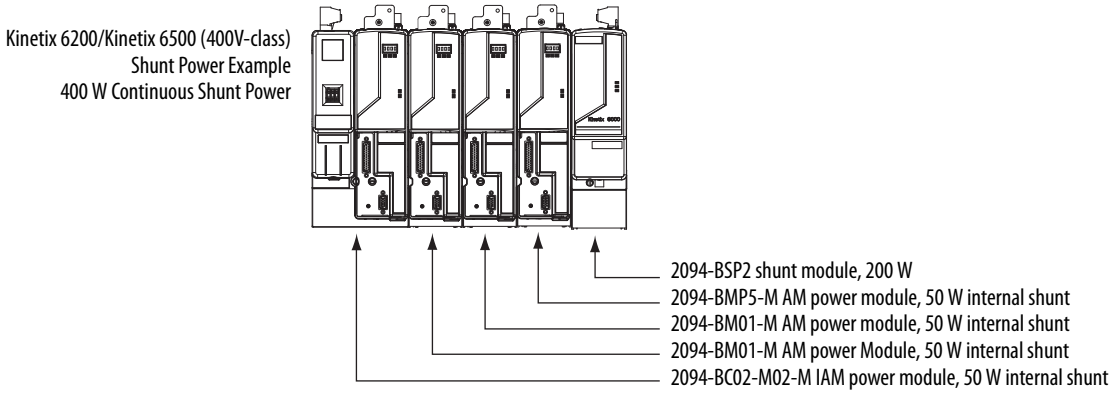

IMPORTANT When the 2094-BSP2 shunt module is wired to a Bulletin 1394 external shunt module, the IAM/AM (internal shunt) and 2094-BSP2 shunt module is disabled and the continuous shunt power is equal to that of the external shunt module alone.

Dimensions - Bulletin 2094 Shunt Module

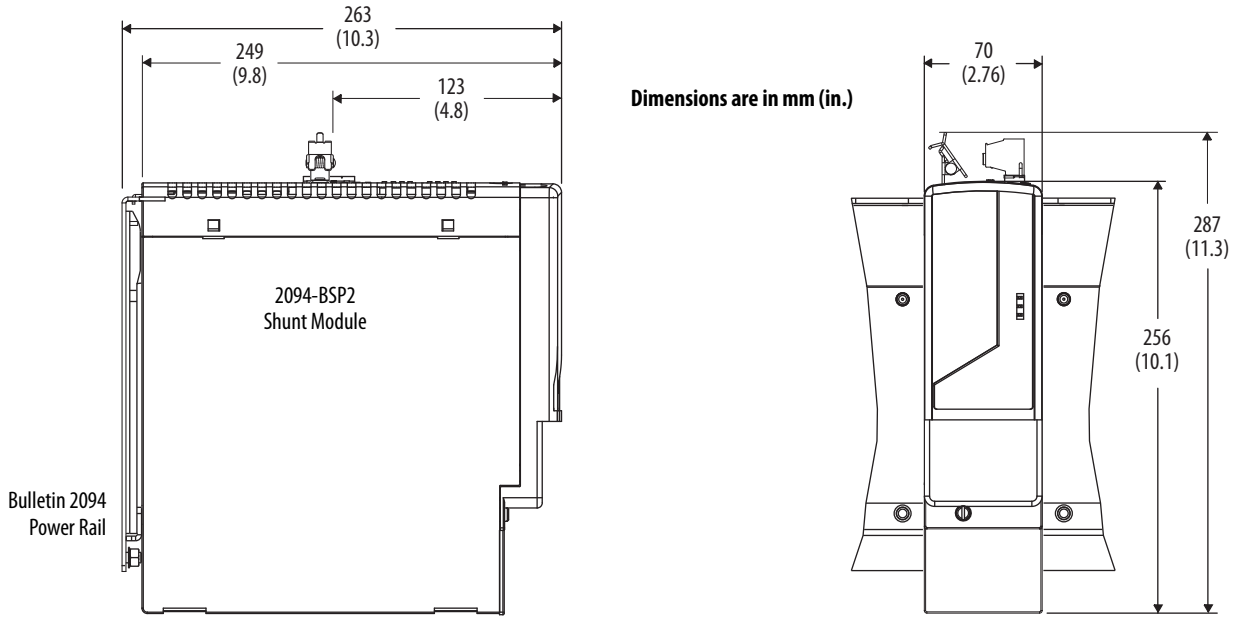

Modules are shown mounted to the power rail and the dimensions reflect that. For replacement connector set catalog number, refer to Connector Sets on page 91.

Bulletin 2094 Slot-filler Module

The Bulletin 2094 slot-filler module (catalog number 2094-PRF) is compatible with Kinetix 6000, Kinetix 6200, and Kinetix 6500 drive families. Install the 2094 slot-filler module in any unoccupied slot on the Bulletin 2094 power rail.

IMPORTANT The 2094-PRF slot-filler module is compatible with all 200V-class and 400V-class systems. Power rail slots not occupied by an IAM, AM, or shunt module, must have a slot-filler module installed.

Slot-filler Module Dimensions

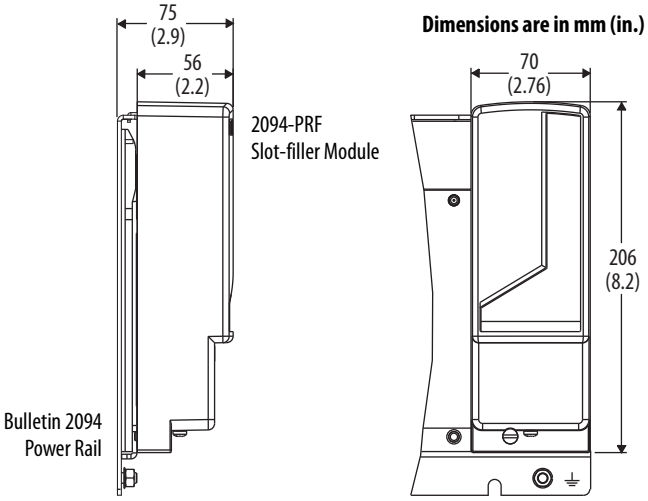

Bulletin 2094 Mounting Brackets

The Bulletin 2094 mounting brackets (catalog number 2094-XNBRKT-1) are designed to save panel space by letting you mount the Bulletin 2094 power rail or line interface module (LIM) over the AC line filter.

Each bracket provides threaded holes for mounting the 2094 power rail or LIM (catalog numbers 2094-AL*xx*S and 2094-XL75S-C*x*). The number of brackets required for use with the power rail and LIM are shown in the table below.

Module to Mount	Brackets Required
LIM (2094-AL*xx*S and -XL75S-C*x*)	2
Power rail (PRS*x*) 1…4 axis	2
Power rail (PRS*x*) 5…8 axis	3

IMPORTANT The 2094-BL*xx*S, 2094-AL09, and 2094-BL02 LIM models are not compatible with the 2094 mounting brackets.

Mounting Bracket Configurations

In the figure below, the power rail (catalog number 2094-PRS*x*) is shown mounted on Bulletin 2094 Mounting Brackets.

Power Rail on 2094 Mounting Brackets

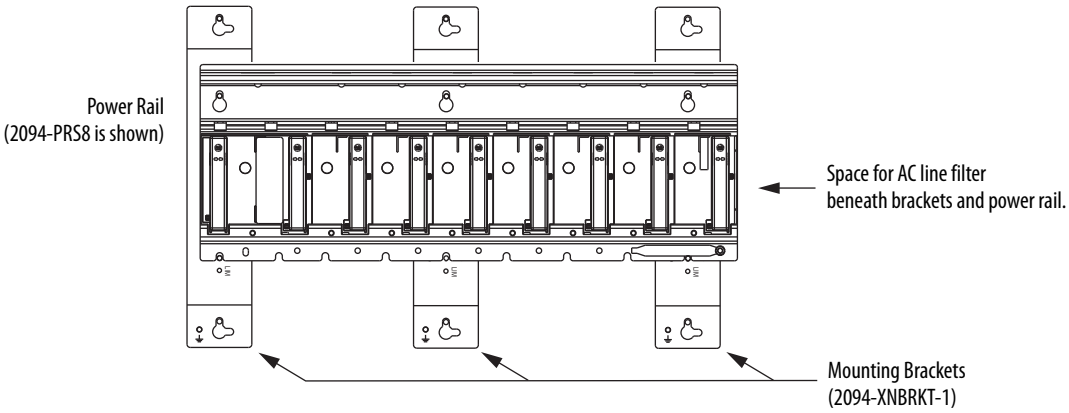

In the figure below, the LIM module (catalog number 2094-AL*xx*S or 2094-XL75S-C*x*) is shown mounted on Bulletin 2094 Mounting Brackets.

LIM Module on 2094 Mounting Brackets

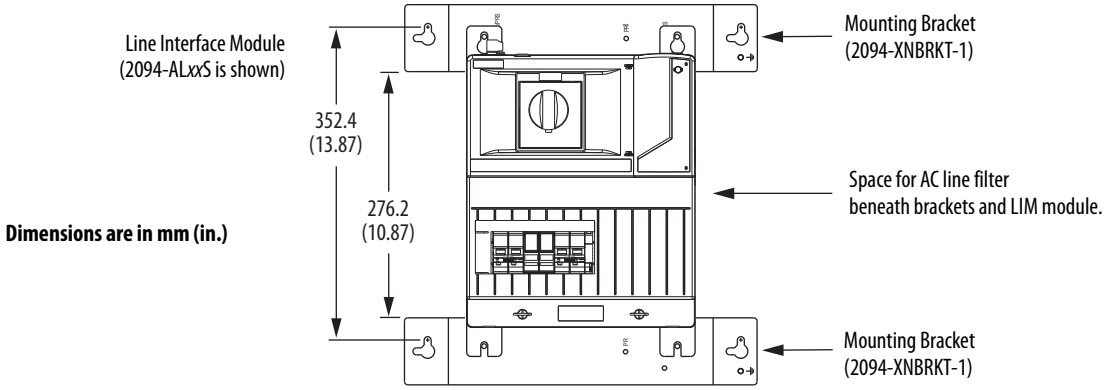

IMPORTANT Only the 2094-AL*xx*S and 2094-XL75S-C*x* line interface modules are compatible with the 2094 mounting brackets. The 2094-BL*xx*S, 2094-AL09, and 2094-BL02 models are not compatible.

Dimensions - Bulletin 2094 Mounting Brackets

The mounting bracket dimensions are shown in the figure below. Additional mounting dimensions, for applications when brackets are used with the LIM, are shown above.

Dimensions (catalog number 2094-XNBRKT-1)

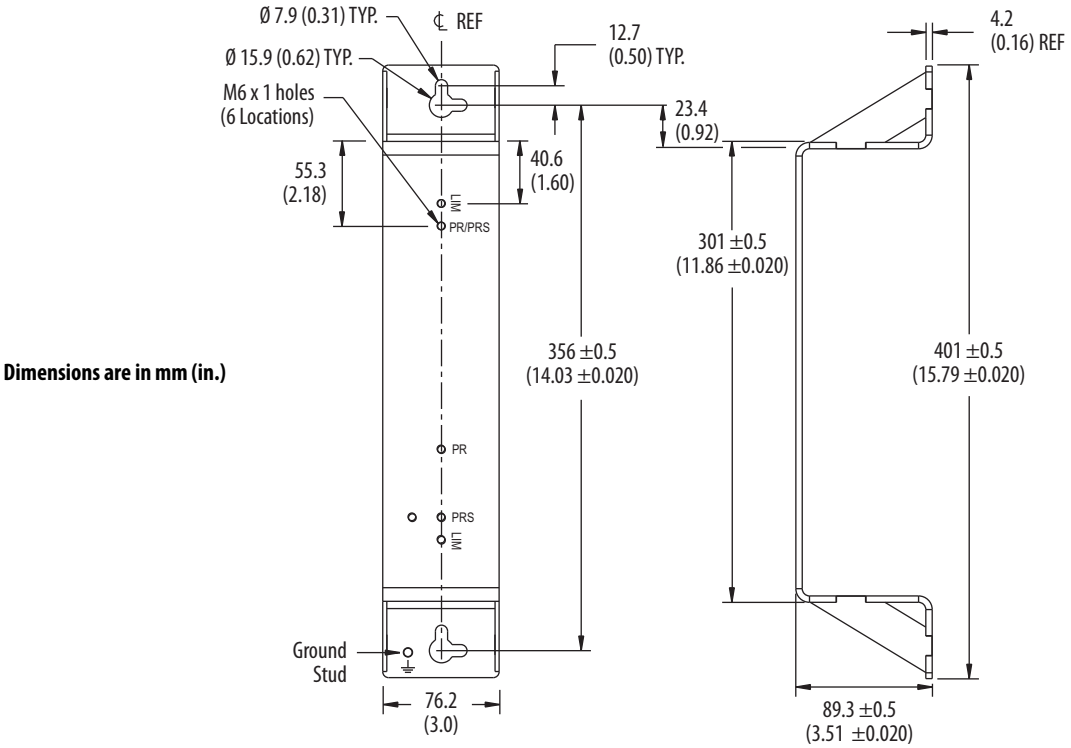

Connector Sets

Kinetix 6000, Kinetix 6200, Kinetix 6500 Drive Families

Drive Module	Drive Cat. No.	Description	Cat. No.
IAM module (converter connectors)	2094-AC05-M*xx*-S and 2094-AC09-M02-S	Includes control power (CPD), DC bus/AC input (IPD), and contactor enable (CED) replacement connectors for the IAM (converter) module.	2094-ANCON-1
	2094-AC16-M03-S and 2094-AC32-M05-S		2094-XNCON-2
	2094-BC01-M*xx*-S and 2094-BC02-M02-S 2094-BC01-M*xx*-M and 2094-BC02-M02-M		2094-BNCON-1
	2094-BC04-M03-S and 2094-BC07-M05-S 2094-BC04-M03-M and 2094-BC07-M05-M		2094-XNCON-2
IAM/AM module (inverter connectors)	2094-AC05-M*xx*-S, 2094-AC09-M02-S, 2094-AMP5-S, 2094-AM01-S, 2094-AM02-S	Includes motor power (MP), motor/resistive brake (BC), and safe-off (SO), replacement connectors for the IAM and AM (inverter) modules. Also includes bracket kit for Sercos fiber-optic cable connectors.	2094-XNINV-1
	2094-AC16-M03-S and 2094-AC32-M05-S 2094-AM03-S, 2094-AM05-S 2094-BC04-M03-S, 2094-BM03-S 2094-BC04-M03-M, 2094-BM03-M		2094-ANINV-2
	2094-BC01-M*xx*-S and 2094-BC02-M02-S 2094-BC01-M*xx*-M and 2094-BC02-M02-M 2094-BMP5-S, 2094-BM01-S, 2094-BM02-S 2094-BMP5-M, 2094-BM01-M, 2094-BM02-M		2094-XNINV-1
	2094-BC07-M05-S, 2094-BM05-S 2094-BC07-M05-M, 2094-BM05-M		2094-BNINV-2
Shunt module	2094-BSP2	Includes external shunt resistor (RC) and external thermal switch (TS) replacement connectors for the shunt module.	2094-XNSHT-1

Kinetix 3, Kinetix 300, Kinetix 350, and Kinetix 7000 Drive Families

Drive Family	Drive Cat. No.	Description	Cat. No.
Kinetix 3	2071-A*xx*	Includes general purpose input power (IPD), analog output (A.out), shunt resistor (BC), and motor power (MP) replacement connectors for Kinetix 3 drives.	2071-CONN1
Kinetix 300	2097-V3*x*PR*x* or	Includes AC input power (IPD), back-up power (CPD), shunt and DC bus (BC), motor power (MP), and safe-off (STO) replacement connectors for Kinetix 300/350 drives.	2097-CONN1
Kinetix 350	2097-V3*x*PR*x*-LM		
Kinetix 7000	2099-BM*xx*-S	Includes safe-off (SO), general purpose I/O (GPIO), general purpose relay (GPR), and control power (CP) replacement connectors for Kinetix 7000 drives.	2099-K7KCK-1

Line Interface Module (LIM) and Resistive Brake Module (RBM)

Module	Cat. No.	Description	Cat. No.
Line interface module (LIM)	2094-AL09 and 2094-BL02	Includes VAC line (IPL), VAC load (OPL), control power (CPL), and 24V brake power (PSL) replacement connectors.	2094-XNLIM-1
	2094-AL*xx*S, 2094-BL*xx*S, and 2094-XL75S-C*x*	Includes I/O (IOL), VAC line (IPL), VAC load (OPL), control power (CPL), 230V auxiliary output (P2L), 24V brake power (P1L), and 230V auxiliary input (APL) replacement connectors.	2094-XNLIM-2
Resistive brake module (RBM)	2090-XB33-*xx*	Includes I/O connector (TB3), drive connector (TB1), and motor connector (TB2).	2090-XNRBM-1
	2090-XB120-*xx*	Includes I/O connector (TB3), 230V input power connector (TB4), drive connector (TB1), and motor connector (TB2).	2090-XNRBM-2

Kinetix Safe-off Components

The safe-off feature is available with Kinetix 6000, Kinetix 6000M, Kinetix 7000, drives and with Kinetix 6200 and Kinetix 6500 drives when the 2094-*xx*02*x*-M0*x*-S0 control modules are used.

You can implement the safe-off function in a single drive or extend it to as many as eight drives in a multiple safety drive configuration. The safe-off connector can also be jumpered to effectively remove the safe-off function (this is the default setting).

Additional Resources for Safe-off Configurations

Resource	Description
Kinetix Safe Torque-off Feature Safety Reference Manual, publication GMC-RM002	Information on wiring and troubleshooting your Kinetix 6000 and Kinetix 7000 servo drives with the safe-off feature.
Kinetix 6000M Integrated Drive-Motor System User Manual, publication 2094-UM003	Information on wiring and troubleshooting your Kinetix 6000M integrated drive-motor system with the IPIM module safe-off feature (catalog number 2094-SEPM-B24-S).
Kinetix 6200 and Kinetix 6500 Safe Torque-off Multi-axis Servo Drives Safety Reference Manual, publication 2094-RM002	Information on wiring, configuring, and troubleshooting the safe torque-off features of your Kinetix 6200 and Kinetix 6500 drives.

Kinetix 6000, Kinetix 6000M, and Kinetix 7000 Safe-off Components

Kinetix 6000, Kinetix 6000M, and Kinetix 7000 drive families share these safe-off cables and headers.

Catalog Numbers - Kinetix 6000, Kinetix 6000M, and Kinetix 7000 Safe-off Components

Cat. No.	Description
2090-XNSM-W	Safe-off wiring header for the first drive in multiple safety drive configurations.
2090-XNSM-M	Safe-off middle header for drive-to-drive connections in multiple safety drive configurations with three or more drives.
2090-XNSM-T	Safe-off terminating header for the last drive in multiple safety drive configurations.
1202-C02	Drive-to-drive safety cable for connecting single-wide Kinetix 6000 drives.
1202-C03	Drive-to-drive safety cable for connecting double-wide Kinetix 6000 drives and 2094-SEPM-B24-S (IPIM) modules.
1202-C10	Drive-to-drive safety cable for connections between two Kinetix 6000 power rails, two Kinetix 7000 drives, or from the Kinetix 6000 power rail to Kinetix 7000 drive.

Safe-off Header Examples

In this example, a single Kinetix 6000 safe-off drive is shown using the wiring plug header with the motion-allowed jumper removed. The second and third drives do not use the safe-off feature, so the motion-allowed jumpers remain installed. This single drive configuration also applies to Kinetix 7000 safe-off applications.

When the motion-allowed jumper is installed on a 2094-SEPM-B24-S IDM power interface module (IPIM), the safe-off feature is disabled on all integrated drive-motor (IDM) units connected to the IPIM module.

Typical Single Drive Safe-off Configuration

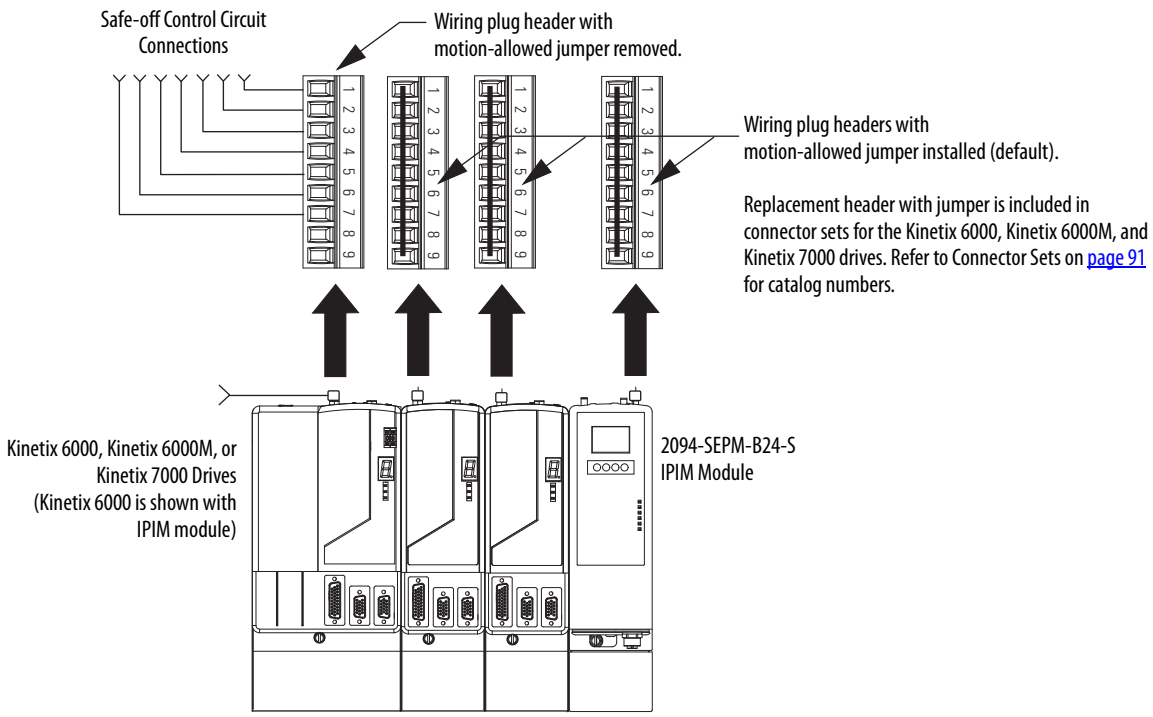

In this example, system 1 contains two (single-wide) Kinetix 6000 drives using the safe-off feature wired with two (double-wide) Kinetix 6000 drives in system 2. System 2 also includes the 2090-SEPM-B24-S IPIM module. The wiring headers with motion allowed jumpers have been replaced as shown. The third axis in system 1 does not use the safe-off feature, so the wiring header and motion allowed jumper remain installed.

This multiple drive configuration also applies to the Kinetix 7000 drives. When wiring the Kinetix 7000 modules from drive-to-drive, use 1202-C10 cables.

Typical Multiple Drive Safe-off Configuration

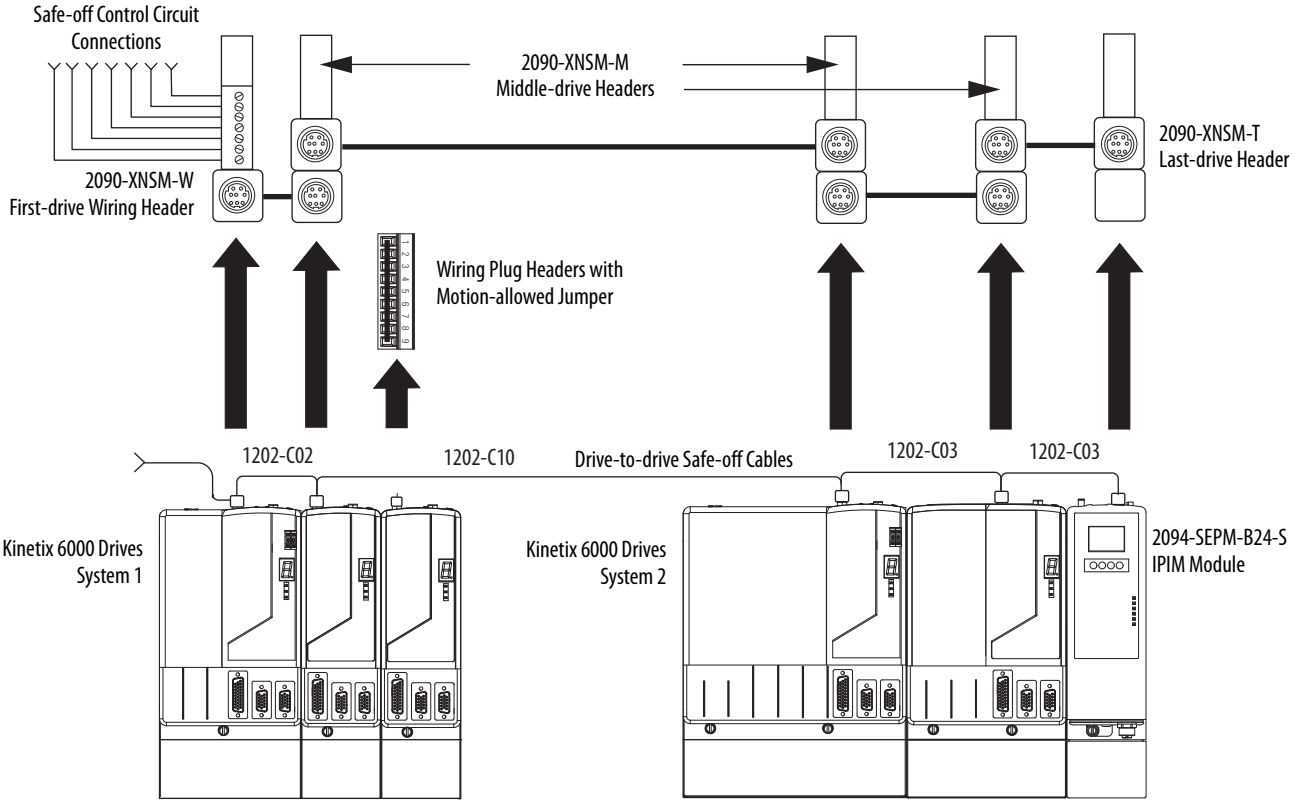

IMPORTANT Due to the current capacity limitation of the safe-off cable connectors, multiple safe-off drive configurations must not exceed eight Kinetix 6000 or Kinetix 7000 drive modules.

Kinetix 6200 and Kinetix 6500 Safe-off Components

Kinetix 6200 and Kinetix 6500 drive families share these safe torque-off connector kits and cables.

Catalog Numbers - Kinetix 6200 and Kinetix 6500 Safe Torque-off Components

Cat. No.	Description
2090-K6CK-D44S0	Low-profile connector kit for I/O and cascading safe torque-off connections from drive-to-drive (44-pin, male, D-sub). For use with any Kinetix 6200 or Kinetix 6500 safe torque-off (catalog number 2094-*xx*02*x*-M0*x*-S0) control module.
2090-CS0DSDS-AA02	Drive-to-drive safety cable for connecting single-wide Kinetix 6200 and Kinetix 6500 drives.
2090-CS0DSDS-AA03	Drive-to-drive safety cable for connecting double-wide Kinetix 6200 and Kinetix 6500 drives.
2090-CS0DSDS-AA10	Drive-to-drive safety cable for connections between two Bulletin 2094 power rails with Kinetix 6200 and Kinetix 6500 drives.

Kinetix 6200/6500 I/O and Cascading Safe Torque-off Low-profile Connector Kit Example

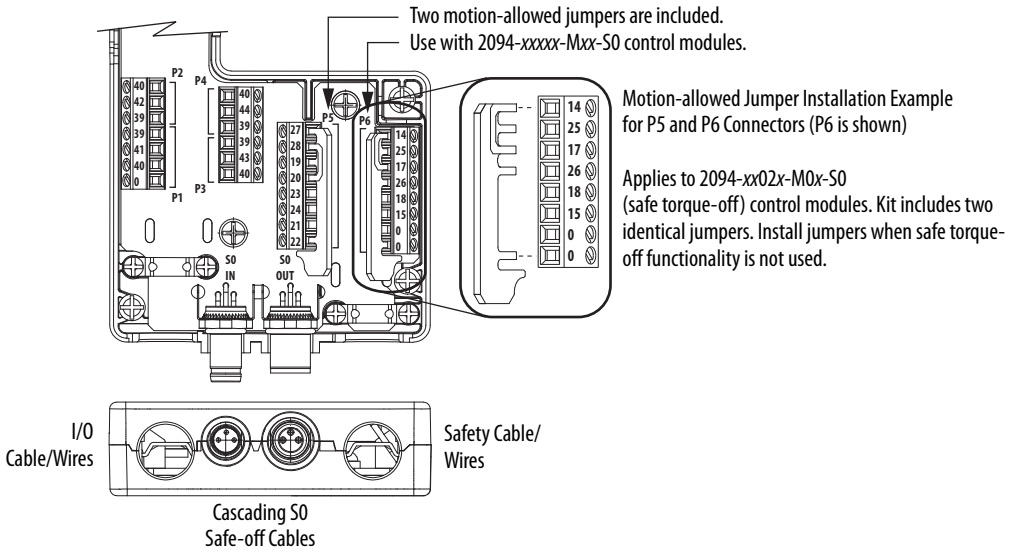

In this example, three safe torque-off drives are shown using the Bulletin 2090 low-profile connector kit and cables. The right-angled cable connectors are keyed to exit left as shown. Cables loop back and cascade to the next drive or other cascading device. Refer to Low-profile Connector Kit Components on page 71 for more information.

Kinetix 6200/6500 Cascading Safe Torque-off Cable Example

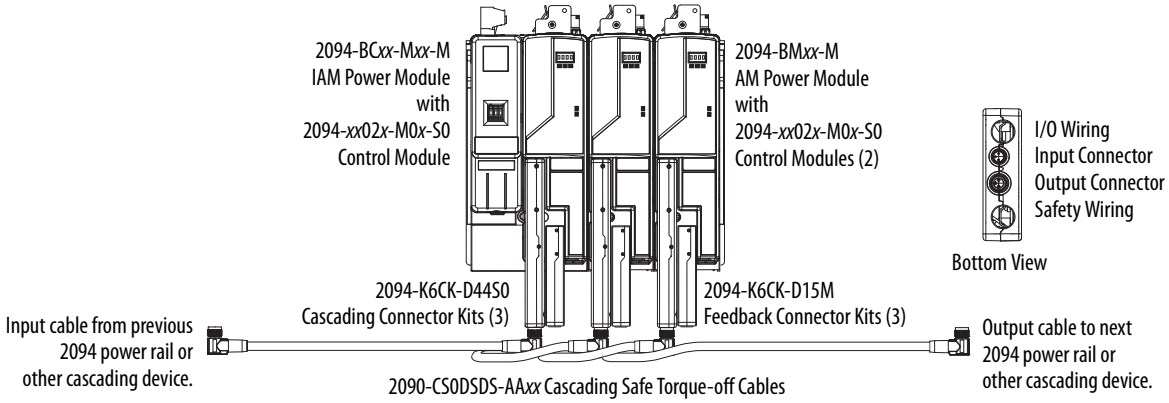

External Auxiliary Encoders

These Allen-Bradley external encoders are suitable for use when auxiliary feedback connections are required for your servo drive application.

Bulletin 842E-CM Integrated Motion on EtherNet/IP Encoders

Bulletin 842E-CM Integrated Motion on EtherNet/IP absolute encoders are designed for motion control applications that require feedback-only axes. These encoders support the standard motion instruction set in the Studio 5000 Logix Designer application. By providing auxiliary feedback directly through an EtherNet/IP network, these encoders eliminate the need for point-to-point wiring.

Bulletin 842E-CM Integrated Motion on EtherNet/IP Encoders

Cat. No.	Description	Features
842E-CM-S*xxxx*	18-bit single-turn resolution	• Support for the standard motion instruction set in the Studio 5000 Logix Designer application • EtherNet/IP interface compliant with IEEE 1588 • Support for linear, ring, and star Ethernet topologies • IP67 environmental rating • Available with solid and hollow shaft
842E-CM-M*xxxx*	30-bit multi-turn resolution	

Refer to http://ab.rockwellautomation.com/motion-control/absolute-encoder for more information.

Bulletin 842HR Sine/Cosine Encoders

Bulletin 842HR sine/cosine encoders combine the advantages of incremental and absolute encoder technologies in a single, standalone unit targeted for high-performance digital servo drive systems. The Bulletin 842HR is a 15-bit encoder featuring a hybrid digital/analog interface, transmitting sine/cosine signals via analog channels for incremental feedback and delivering absolute position information through the digital RS-485 channel.

Bulletin 842HR, Size 25, Sine/Cosine Encoders

Cat. No.	Description	Features
842HR-MJDZ115FWYD	• Square flange • 3/8 in. solid-shaft • 17-pin connector • 5…12V operating voltage	• Absolute feedback for position control • RS-485 interface • Hiperface interface compatible • IP66 (IEC 529)
842HR-SJDZ115FWYD		

Refer to http://ab.rockwellautomation.com/motion-control/absolute-encoder for more information.

Bulletin 844D Incremental Encoders

Bulletin 844D through-shaft incremental encoders are used to electronically monitor the position or speed of a rotating shaft. Shaft position is converted to digital pulses in an A quad B format. A Zero Index Channel is also included with all models.

Bulletin 844D Hollow-shaft (HS35 Style) Encoders

Cat. No.	Resolution	Description
844D-B5CC1FW	1024 PPR	• 5/8 in. through-shaft • 3/8 in. bolt on 2.5…4.0 in. diameter radius • 10-pin connector • 5V DC input /5V DC DLD output (3487)
844D-B5CC1CS	2048 PPR	
844D-B5CC1DR	5000 PPR	

Bulletin 847H Incremental Encoders

The Bulletin 847H optical incremental encoders electronically digitize shaft motion of a rotating element by converting mechanical motion to an electronic digital format. Incremental square waves are accumulated in a counter as position feedback. The encoder provides code disk resolutions up to 5000 pulses per revolution at a signal frequency response of 210 kHz. The Bulletin 847H encoder is housed in a size 25, NEMA Type 4 and 13, IP66 (IEC 529), enclosure making it suitable for many of today's industrial environments.

Bulletin 847H, Size 25, High Performance, Encoders

Cat. No.	Resolution	Description
847H-SJDN14FWY2	1024 PPR	• Square flange • 3/8 in. with flat shaft • 5V DC input /5V DC DLD RS-422 output • Radial connector (side)
847H-SJDN14CSY2	2048 PPR	
847H-SJDN14DRY2	5000 PPR	

Bulletin 847T Incremental Encoders

Bulletin 847T optical incremental encoders are used to electronically monitor the position of a rotating shaft. Shaft motion is converted to digital pulses that are accumulated and evaluated by various electronic controllers. The Bulletin 847T encoder provides code disk resolutions of up to 3000 pulses per revolution, and a frequency response of up to 100 kHz. The Bulletin 847T encoder is a heavy duty, NEMA Type 4, and IP66 (IEC 529) rated optical incremental shaft encoder that is housed in a 2-in. diameter enclosure.

Bulletin 847T, Size 20, Heavy Duty Encoders

Cat. No.	Resolution	Description
847T-DN13EFW	1024 PPR	• Square flange • 3/8 in. with flat shaft • 5V DC input /5V DC DLD output • Channel A, B, and Z signals • 10-pin connector
847T-DN13ECS	2048 PPR	

Refer to http://ab.rockwellautomation.com/motion-control/incremental-optical-encoder for more information on Bulletin 844 and 847 incremental external encoders.

Line Interface Modules

The Bulletin 2094 line interface module (LIM) is designed to replace many of the common input power devices required for your servo drive system. By using the LIM module, you save panel space and reduce the amount of wiring when compared with individual components mounted separately.

In this example, the 2094-BL*xx*S module is compared to a similar configuration of discrete components. Auxiliary and control power (230V) is developed from the LIM module three-phase input power.

Comparing the LIM Module with Discrete Components (catalog number 2094-BL*xx*S)

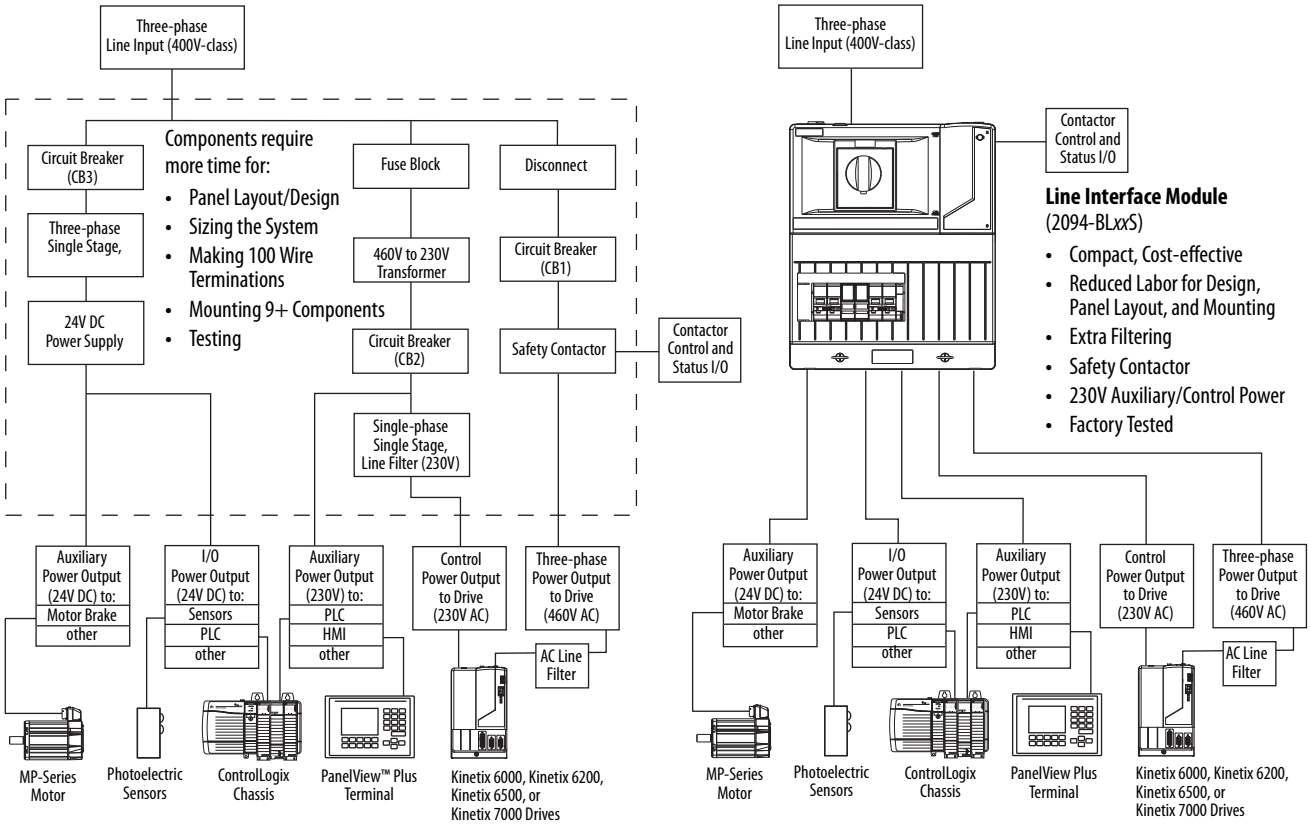

An example comparing the 2094-AL*xx*S module to discrete components would be similar to the example above, but with 230V three-phase input power and without the 460V to 230V step-down transformer.

Examples comparing the 2094-AL09 and 2094-BL02 modules to discrete components would also be similar to the examples above and include the features that apply to those models.

Drive/LIM Module Compatibility

Drive Family	Drive Cat. No.	Compatible LIM Module Cat. No.
Kinetix 2000	2093-AC05-M*xx*	2094-AL*xx*S, 2094-XL75S-C2, 2094-AL09
Kinetix 6200/ Kinetix 6500	2094-BC*xx*-M*xx*-M	2094-BL*xx*S, 2094-BL02, 2094-XL75S-C*x*
Kinetix 6000	2094-*x*C*xx*-M*xx*-S	2094-AL*xx*S, 2094-AL09, 2094-BL*xx*S, 2094-BL02, 2094-XL75S-C*x*
Kinetix 7000	2099-BM06-S, 2099-BM07-S, 2099-BM08-S	2094-BL75S

In this example, the 2094-XL75S-C1 and 2094-XL75S-C2 modules are compared to a similar configuration of discrete components. Both of these units provide a connector for an external (customer-supplied) auxiliary and control power input. The 2094-XL75S-C1 module is designed for 110V auxiliary and control power input/output. The 2094-XL75S-C2 module is designed for 230V auxiliary and control power input/output.

Comparing the LIM Module with Discrete Components (catalog number 2094-XL75S-C*x*)

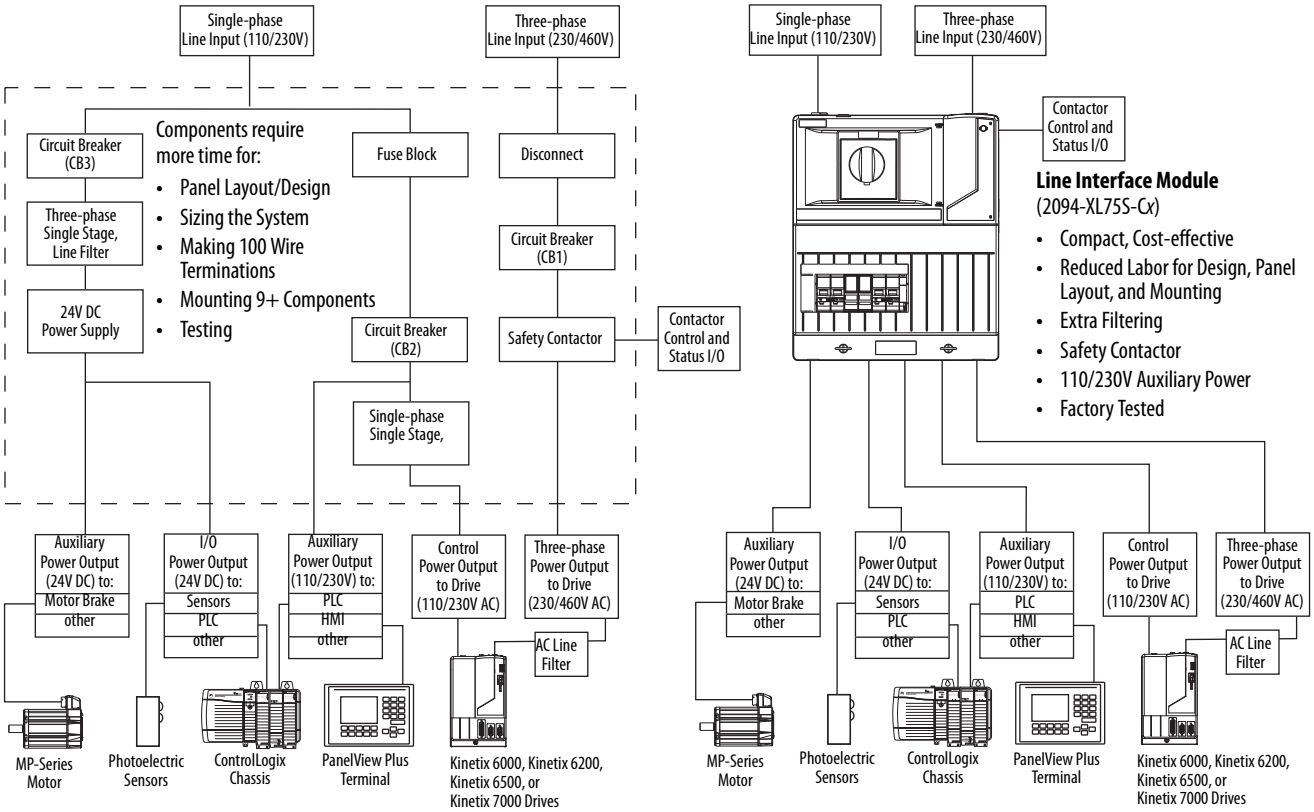

Branch circuit protection for the 2094-AL*xx*S and 2094-BL*xx*S modules is customer configurable. By moving the CB2/CB3 wiring harness (P4) from one side of CB1 to the other, you can change the module operation. To understand this option, refer to the simplified block diagram below.

Simplified Block Diagram (catalog numbers 2094-ALxxS and 2094-BLxxS)

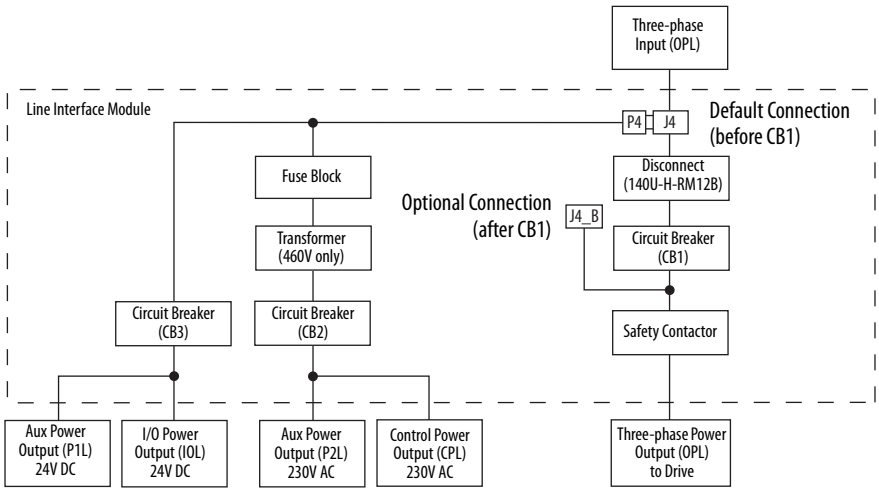

Line Interface Module Features and Indicators

Catalog Numbers 2094-AL*xx*S, 2094-BL*xx*S, and 2094-XL75S-C*x*

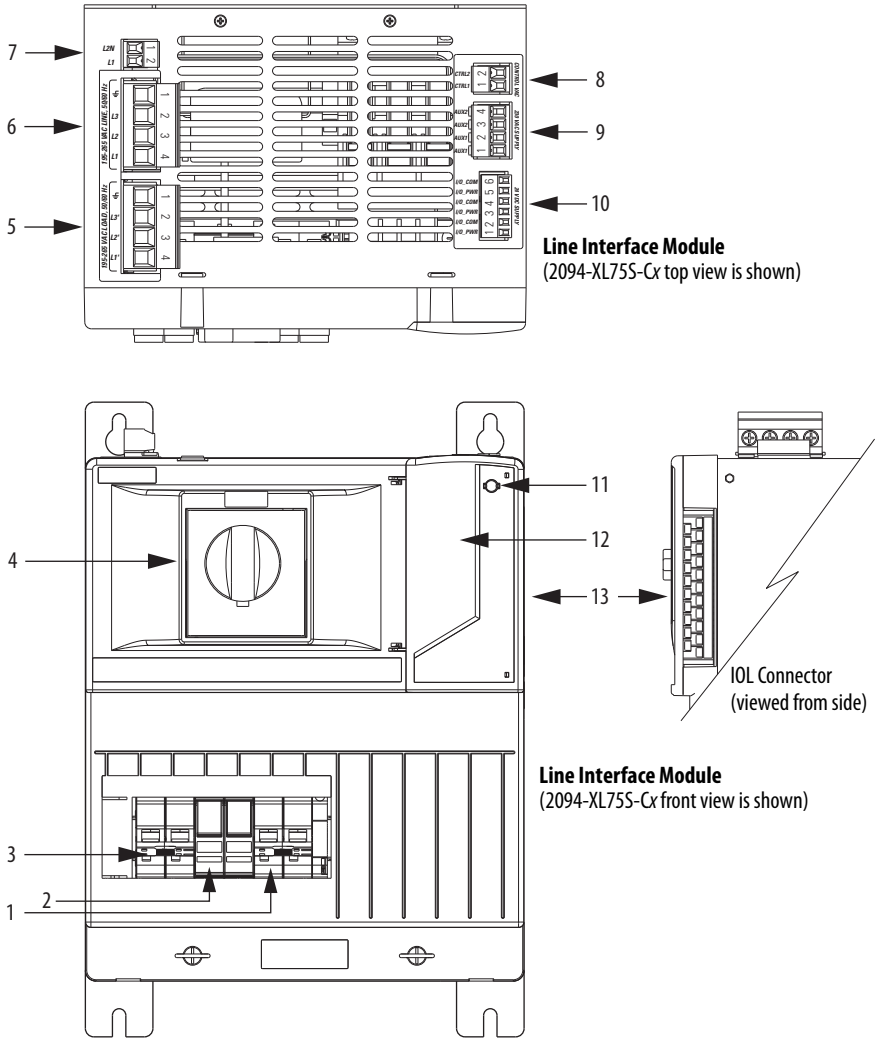

Item	Description
1	CB2 - Control and auxiliary VAC
2	FB1 - Fuse block
3	CB3 - Brake and I/O VAC
4	CB1 - Main VAC disconnect
5	VAC load (OPL) connector
6	VAC line (IPL) connector
7	Auxiliary power input (APL) connector (1)

(1) Auxiliary Power Input (APL) connector is present on only the 2094-XL75S-C*x* model.

Item	Description
8	Control power output (CPL) connector
9	Auxiliary power output (P2L) connector
10	24V DC brake power output (P1L) connector
11	24V power status indicator
12	I/O (IOL) connector access door
13	I/O (IOL) connector

For replacement connector set catalog numbers, refer to Connector Sets on page 91.

Catalog Numbers 2094-AL09 and 2094-BL02

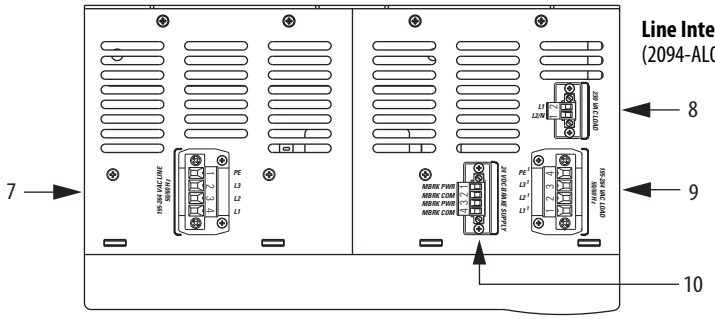

Line Interface Module
(2094-AL09 top view is shown)

Item	Description
1	CB3 - Brake and I/O VAC
2	CB2 - Control and auxiliary VAC
3	CB1 - Main VAC
4	I/O (IOL) connector
5	I/O power status indicator
6	Brake power status indicator
7	VAC line (IPL) connector
8	Control power output (CPL) connector
9	VAC load output (OPL) connector
10	24V DC brake power output (PSL) connector

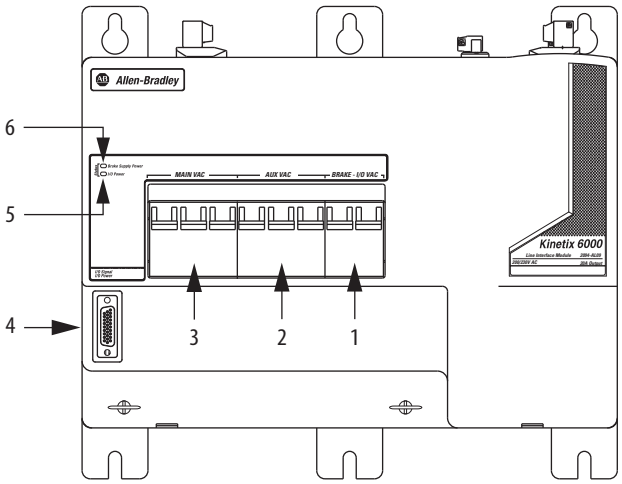

Line Interface Module
(2094-AL09 front view is shown)

For I/O connector kit, refer to Low-profile Connector Kit Components on page 71.

Catalog Numbers - Line Interface Modules

Cat. No.	Voltage Class	Description
2094-AL09	200V-class 50/60 Hz	20 A, 24V DC @ 8 A, internal three-phase line filter
2094-AL15S		15 A, 230V AC auxiliary power output, 24V DC @ 20 A, configurable branch circuit protection
2094-AL25S		25 A, 230V AC auxiliary power output, 24V DC @ 20 A, configurable branch circuit protection
2094-AL50S		50 A, 230V AC auxiliary power output, 24V DC @ 20 A, configurable branch circuit protection
2094-AL75S		75 A, 230V AC auxiliary power output, 24V DC @ 20 A, configurable branch circuit protection
2094-BL02	400V-class 50/60 Hz	30 A, 24V DC @ 8 A, internal three-phase line filter
2094-BL10S		10 A, 230V AC auxiliary power output, 24V DC @ 20 A, configurable branch circuit protection
2094-BL25S		25 A, 230V AC auxiliary power output, 24V DC @ 20 A, configurable branch circuit protection
2094-BL50S		50 A, 230V AC auxiliary power output, 24V DC @ 20 A, configurable branch circuit protection
2094-BL75S		75 A, 230V AC auxiliary power output, 24V DC @ 20 A, configurable branch circuit protection
2094-XL75S-C1	200/400V-class 50/60 Hz	75 A, Input for 110V AC (customer-supplied) auxiliary power, 24V DC @ 20 A
2094-XL75S-C2		75 A, Input for 230V AC (customer-supplied) auxiliary power, 24V DC @ 20 A

Line Interface Module Selection

This table provides a summary of the features available with each line interface module. Use this table and Line Interface Module Selection Flowchart on page 103 to select a LIM module for your drive system.

Features	2094-AL*xx*S	2094-BL*xx*S	2094-XL75S-C1	2094-XL75S-C2	2094-AL09	2094-BL02
Voltage class	200V	400V	200V or 400V		200V	400V
Auxiliary and Control Power Input (customer-supplied)	N/A		110V	230V	N/A	
Auxiliary Power Output	230V (1)				N/A	
Control Power Output	230V				230V	
24V DC Power Output Current Capacity	20 A				8 A	
Configurable Branch Circuit Protection	Yes	Yes	No	No	No	No
Branch Circuit Protection and Disconnect			Yes	Yes		
Power to Multiple Power Rails (2)						
DC Line Filter						
Mounting Bracket Compatibility		No				
AC Line Filter	External (customer-supplied)				Internal	Internal
Auxiliary/Control Power Line Filter	Yes					

(1) Auxiliary power output developed internal to LIM module.

(2) For more information on powering multiple power rails from one line interface module, refer to Rockwell Automation technical support.

Use this flowchart to select a LIM module for your drive system based on the input voltage and features you need.

Line Interface Module Selection Flowchart

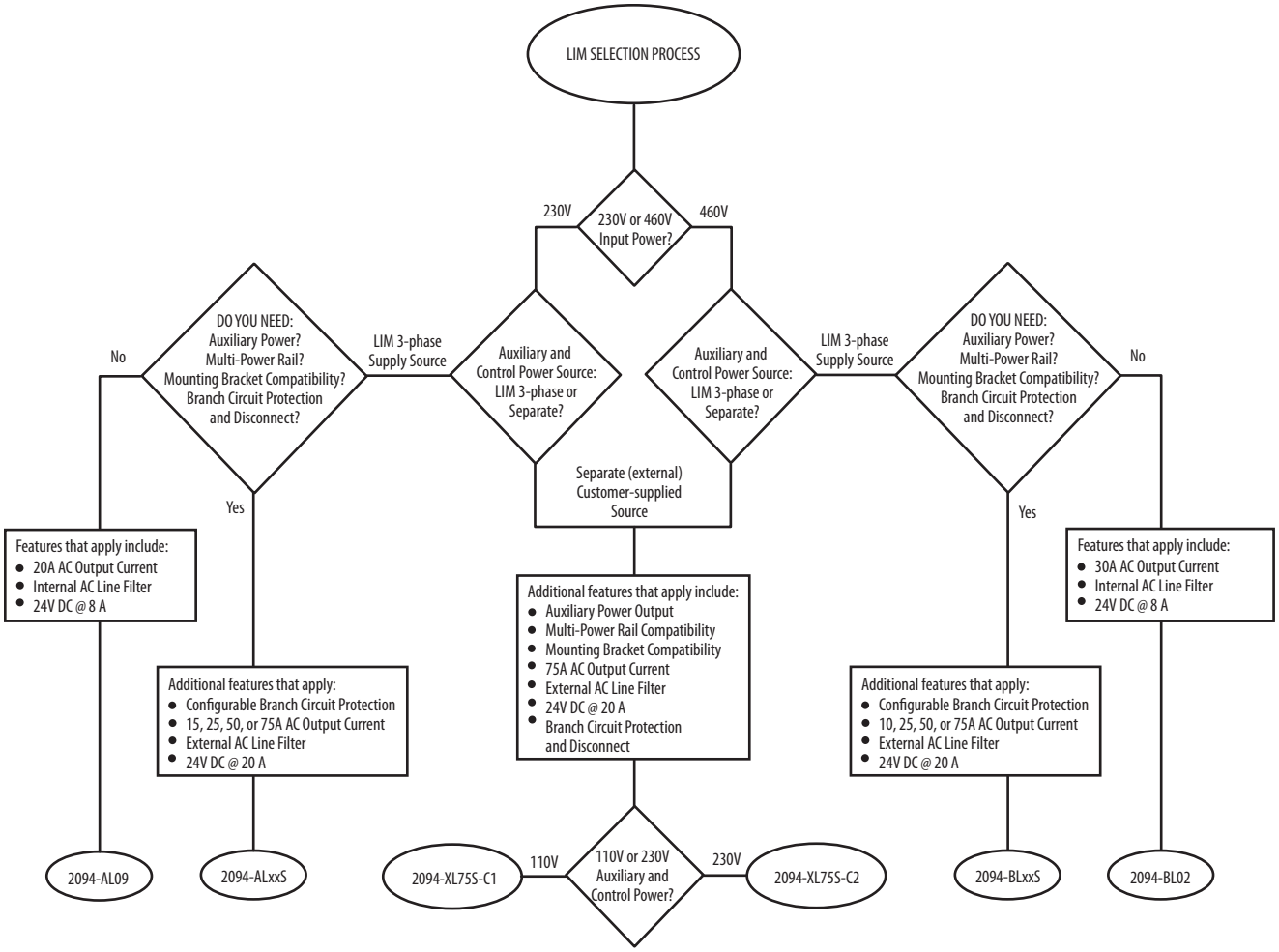

Technical Specifications - Line Interface Modules

Catalog Numbers 2094-AL*xx*S and 2094-BL*xx*S

Designators	Attribute	2094-AL*xx*S (200V-class)				2094-BL*xx*S (400V-class)			
		AL15S	AL25S	AL50S	AL75S	BL10S	BL25S	BL50S	BL75S
VAC Line (IPL) Connector	AC input voltage	195…265V rms, three-phase (230V nom)				380…520V rms, three-phase (460V nom)			
	AC input frequency	47…63 Hz				47…63 Hz			
VAC Load (OPL) Connector	Main AC output current (rms)	15 A	25 A	50 A	75 A	10 A	25 A	50 A	75 A
Control Power Output (CPL) Connector and Auxiliary Power Output (P2L) Connector	AC output current (rms)	3 A (1)				3 A (1)			
	AC output voltage	195…265V rms, single-phase (230V nom)				190…260V rms, single-phase (230V nom)			
Brake Power Output (P1L) Connector and I/O (IOL) Connector	24V DC Power Supply	20 A (2)				20 A (2)			
Contactor (CR1)	Contactor control voltage (3)	21.6…26.4V DC				21.6…26.4V DC			
	Contactor control current (3)	12…9 mA				12…9 mA			
	Contactor pickup current (4)	N/A (Internal)				N/A (Internal)			
	Contactor hold-in current (4)	N/A (Internal)				N/A (Internal)			
	Contactor voltage	N/A (Internal)				N/A (Internal)			
	Contactor pickup time	18.5 ms (min) 30.0 ms (max)				18.5 ms (min) 30.0 ms (max)			
	Contactor dropout time	10.0 ms (min) 60.0 ms (max)				10.0 ms (min) 60.0 ms (max)			

(1) Sum of CPL and P2L current must not exceed 3 A.
(2) Sum of P1L and IOL current must not exceed 20 A.
(3) Power specifications for DC Interface Module (100 JE) COIL_E1 and COIL_E2 input.
(4) Current provided by auxiliary VAC input.

Catalog Number 2094-XL75S-C*x*

Designators	Attribute	2094-XL75S-C1 (200/400V-class)	2094-XL75S-C2 (200/400V-class))
VAC Line (IPL) Connector	AC input voltage	195…520V rms, three-phase (230…460V nom)	
	AC input frequency	47…63 Hz	
VAC Load (OPL) Connector	Main AC output current (rms)	75 A	
Auxiliary Power Input (APL) Connector	Auxiliary AC input voltage	93…121V rms, single-phase (110V nom)	196…253V rms, single-phase (230V nom)
	Auxiliary AC input current (rms)	20 A	11 A
Control Power Output (CPL) Connector and Auxiliary Power Output (P2L) Connector	AC output current (rms)	12 A	5 A
	AC output voltage	93…121V rms, single-phase (110V nom)	196…253V rms, single-phase (230V nom)
Brake Power Output (P1L) Connector and I/O (IOL) Connector	24V DC power supply	20 A	
Contactor (CR1)	Contactor control voltage (1)	21.6…26.4V DC	
	Contactor control current (1)	12…9 mA	
	Contactor pickup current (2)	1.75 A	0.87 A
	Contactor hold-in current (2)	0.14 A	0.07 A
	Contactor voltage	93…121V rms, single-phase (110V nom)	196…253V rms, single-phase (230V nom)
	Contactor pickup time	18.5 ms (min) 30.0 ms (max)	
	Contactor dropout time	10.0 ms (min) 60.0 ms (max)	

(1) Power specifications for DC Interface Module (100 JE) COIL_E1 and COIL_E2 input.
(2) Current provided by auxiliary VAC input.

Catalog Numbers 2094-AL09 and 2094-BL02

Designator	Attribute	2094-AL09 (200V-class)	2094-BL02 (400V-class)
VAC Line (IPL) Connector	AC input voltage	195…265V rms, three-phase (230V nom)	380…520V rms, three-phase (460V nom)
	AC input frequency	47…63 Hz	
VAC Load (OPL) Connector	Main AC output current	20 A rms	30 A rms
Control Power Output (CPL) Connector	AC output current	3 A	
	AC output voltage	195…265V rms, three-phase (230V nom)	190…260V rms, three-phase (230V nom)
Brake Power Output (PSL) Connector	Brake power 24V DC	2.0 A	
	I/O brake power 24V DC	5.7 A	
LIM Contactor (CR1)	Contactor pickup current	383 mA	
	Contactor hold-in current	383 mA	
	Contactor voltage	24V DC	
	Contactor pickup time	50 ms (min) 80 ms (max)	
	Contactor dropout time	80 ms (min) 125 ms (max)	

Dimensions - Line Interface Modules

Catalog Numbers 2094-AL*xx*S, 2094-BL*xx*S, and 2094-XL75S-C*x*

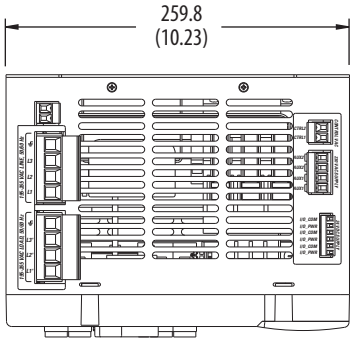

Dimensions are in mm (in.)
(2094-XL75S-C*x* is shown)

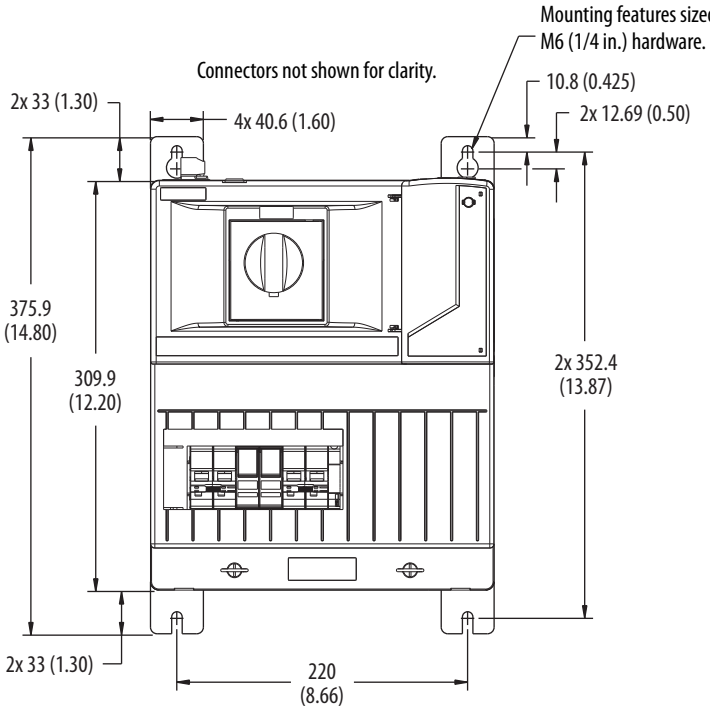

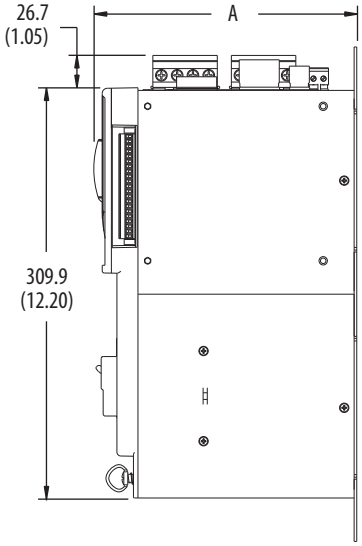

Cat. No.	Dimension A mm (in.)
2094-AL*xx*S	198.3 (7.81)
2094-XL75S-C*x*	
2094-BL*xx*S	248.0 (9.76)

Catalog Number 2094-AL09

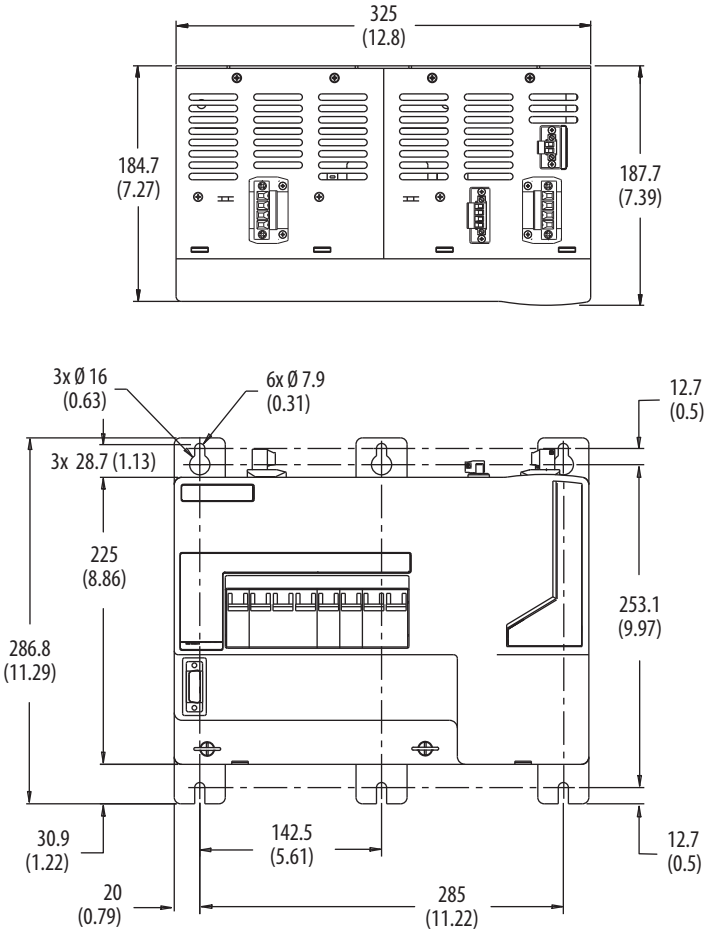

Dimensions are in mm (in.)

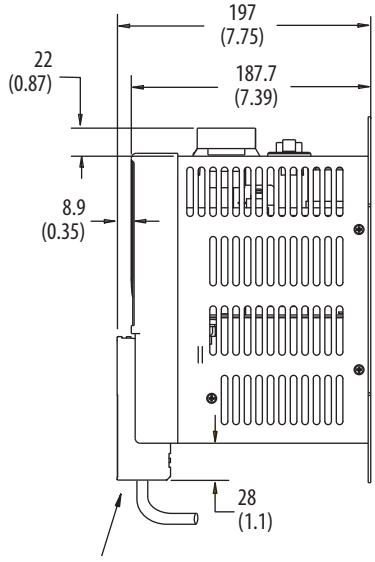

Flying Lead I/O Cable with 2090-K6CK-D26M Low-profile Connector Kit

IMPORTANT: Additional clearance below the connector is necessary to provide the recommended cable bend radius.

Catalog Number 2094-BL02

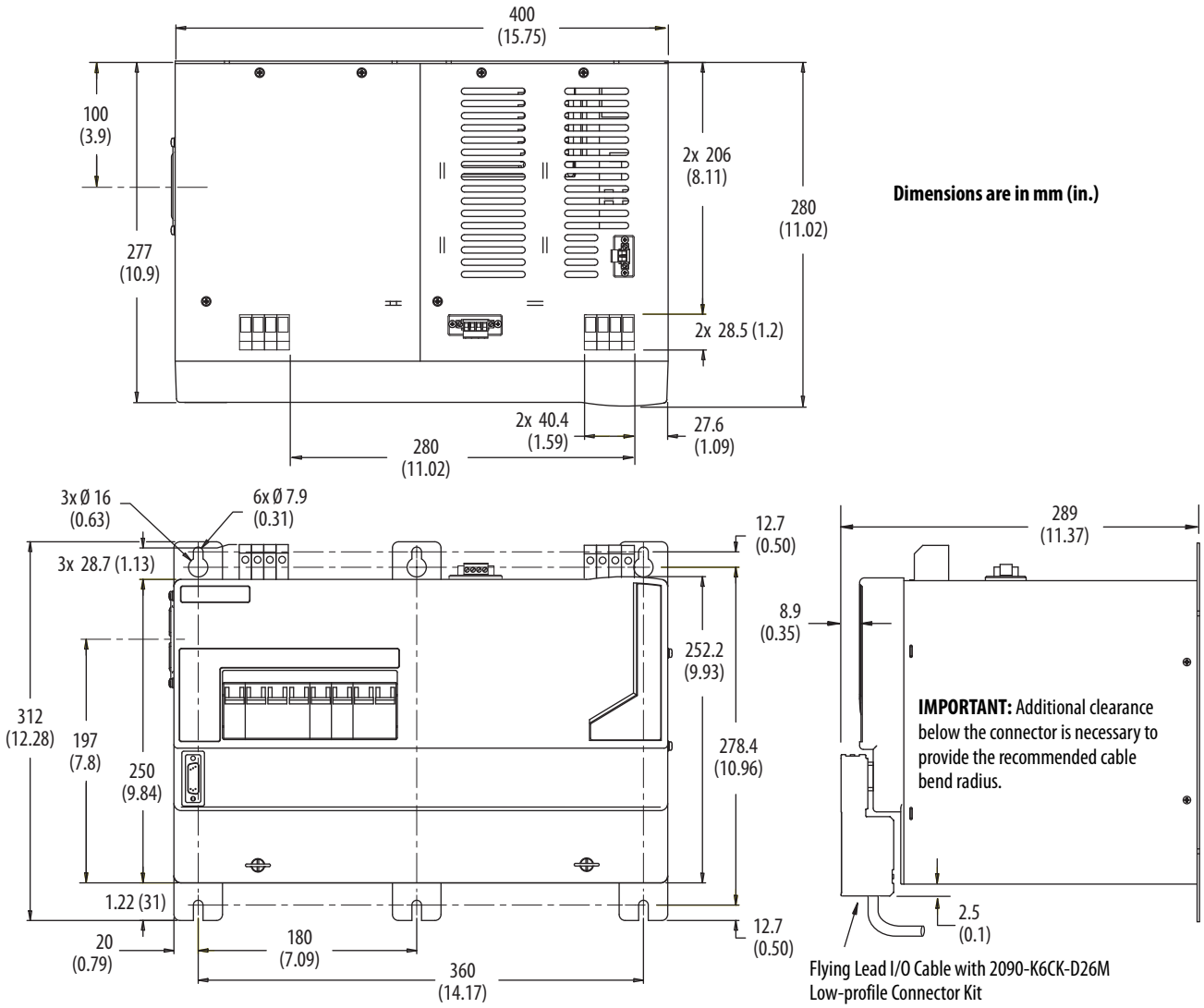

AC Line Filters

This section contains AC line filter selection tables, specification tables, and dimension drawings. Use the tables below to match an AC line filter to your servo drive.

AC Line Filter Catalog Numbers

Drive Family	Drive Cat. No.	AC Line Filter Cat. No.
Kinetix 6000	2094-AC05-MP5-S	2090-XXLF-X330B
	2094-AC05-M01-S	
	2094-AC09-M02-S	
	2094-AC16-M03-S	2090-XXLF-375
	2094-AC32-M05-S	2090-XXLF-3100
	2094-BC01-MP5-S	2090-XXLF-X330B
	2094-BC01-M01-S	
	2094-BC02-M02-S	
	2094-BC04-M03-S	2090-XXLF-375B
	2094-BC07-M05-S	2090-XXLF-3100
Kinetix 6200/ Kinetix 6500	2094-BC01-MP5-M	2090-XXLF-X330B
	2094-BC01-M01-M	
	2094-BC02-M02-M	
	2094-BC04-M03-M	2090-XXLF-375B
	2094-BC07-M05-M	2090-XXLF-3100

Drive Family	Drive Cat. No.	AC Line Filter Cat. No.
Kinetix 3	2071-AP0…2071-AP4	2090-XXLF-TC116
	2071-AP8 (single-phase)	
	2071-AP8 (three-phase)	2090-XXLF-TC316
	2071-A10…2071-A15	
Kinetix 2000	2093-AC05-M*xx*	2090-XXLF-TC116
		2090-XXLF-TC316
Kinetix 7000	2099-BM06-S	2090-XXLF-TC350
	2099-BM07-S	
	2099-BM08-S	2090-XXLF-TC365
	2099-BM09-S	2090-XXLF-TC3100
	2099-BM10-S	2090-XXLF-TC3150
	2099-BM11-S	2090-XXLF-TC3200
	2099-BM12-S	N/A
8720MC-RPS	8720MC-RPS065-B*x*	8720MC-RFI80
	8720MC-RPS190-B*x*	8720MC-EF190-VB (1)

(1) Line filter unit includes magnetic contactor, harmonic filter, and varistor.

AC Line Filter Catalog Numbers

Drive Family	Drive Cat. No.	AC Line Filter (1) Cat. No.	Drive Operation
Kinetix 300/ Kinetix 350	2097-V31PR0-*xx*	2090-UXLF-110	Single phase
	2097-V31PR2-*xx*	2090-XXLF-TC116	
	2097-V33PR1-*xx*	2090-UXLF-106	
	2097-V33PR3-*xx*	2090-UXLF-110	
	2097-V33PR5-*xx*	2090-UXLF-123	
	2097-V33PR6-*xx*	2090-XXLF-TC316	Three phase

(1) For Bulletin 2097 line filters used with the Kinetix 300/350 drive families, refer to Kinetix Servo Drives Technical Data, publication KNX-TD003.

Technical Specifications - AC Line Filters

AC Line Filter Cat. No.	Specifications (1) (2)							Dimensions
	Voltage	Phase	Current A @ 50 °C (122 °F)	Power Loss W	Leakage Current mA	Weight, approx kg (lb)	Operating Temperature	
2090-UXLF-106	250V AC 50/60 Hz	Single	6	3.5	2.26	0.3 (0.66)	-25…85 °C (-13…185 °F)	page 111
2090-UXLF-110			10	2.7	45	0.95 (2.0)		
2090-UXLF-123			23	10	90	1.6 (3.5)		
2090-XXLF-TC116			16	4.9	87	0.80 (1.7)	-25…100 °C (-13…212 °F)	page 115
2090-XXLF-X330B	500V AC 50/60 Hz	Three	30	38	64	2.7 (5.9)	-25…85 °C (-13…185 °F)	page 112
2090-XXLF-375			75	57	50	5.2 (11.4)		page 113
2090-XXLF-375B					108			
2090-XXLF-3100			100	75	73	9.5 (20.9)		
2090-XXLF-TC316	520V AC 50/60 Hz		16	7.1	38	0.80 (1.7)	-25…100 °C (-13…212 °F)	page 114
2090-XXLF-TC350			50	13.8	38	2.4 (5.3)		
2090-XXLF-TC365			65	14.5	38	2.4 (5.3)		
2090-XXLF-TC3100			100	18.1	38	5.2 (11.5)		
2090-XXLF-TC3150			150	8.5	76	7.5 (16.5)		page 115
2090-XXLF-TC3200			200	14.2	76	7.5 (16.5)		
8720MC-RFI80			80	25.9	–	5.3 (11.7)	-25…85 °C (-13…185 °F)	page 116
8720MC-EF190-VB			190	–	–	34.0 (74.8)		

(1) For all filters, 90% relative humidity.
(2) For all filters, 10…200 Hz @ 1.8 g vibration.

Dimensions - AC Line Filters

AC Line Filter Dimensions

Dimensions are in mm (in.)

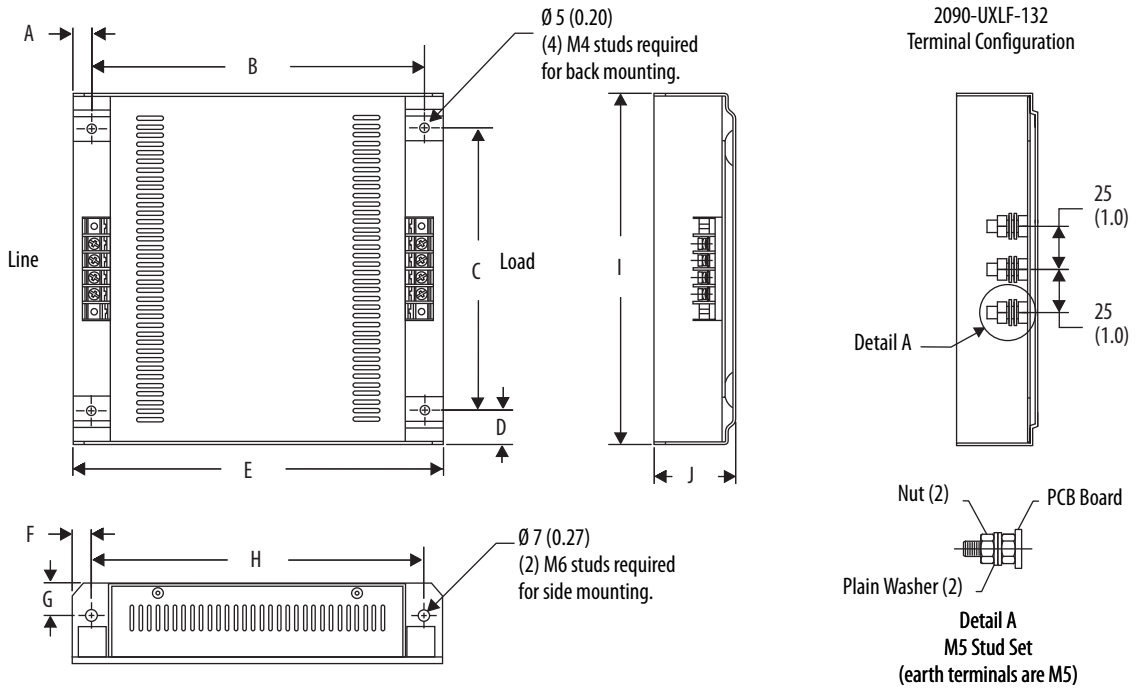

Cat. No.	A mm (in.)	B mm (in.)	C mm (in.)	D mm (in.)	E mm (in.)	F mm (in.)	G mm (in.)	H mm (in.)	I mm (in.)	J mm (in.)
2090-UXLF-106	9.0 (0.35)	152.0 (5.99)	55.0 (2.17)	18.0 (0.71)	170.0 (6.69)	9.0 (0.35)	10.0 (0.39)	152.0 (5.99)	92.0 (3.62)	25.0 (0.98)
2090-UXLF-110	11.0 (0.43)	192.0 (7.56)	104.0 (4.0)	20.0 (0.79)	214.0 (8.42)	11.0 (0.43)	16.0 (0.63)	192.0 (7.56)	145.0 (5.71)	40.0 (1.58)
2090-UXLF-123			164.0 (6.46)				19.0 (0.75)		204 (8.04)	47.0 (1.85)

AC Line Filters Dimensions

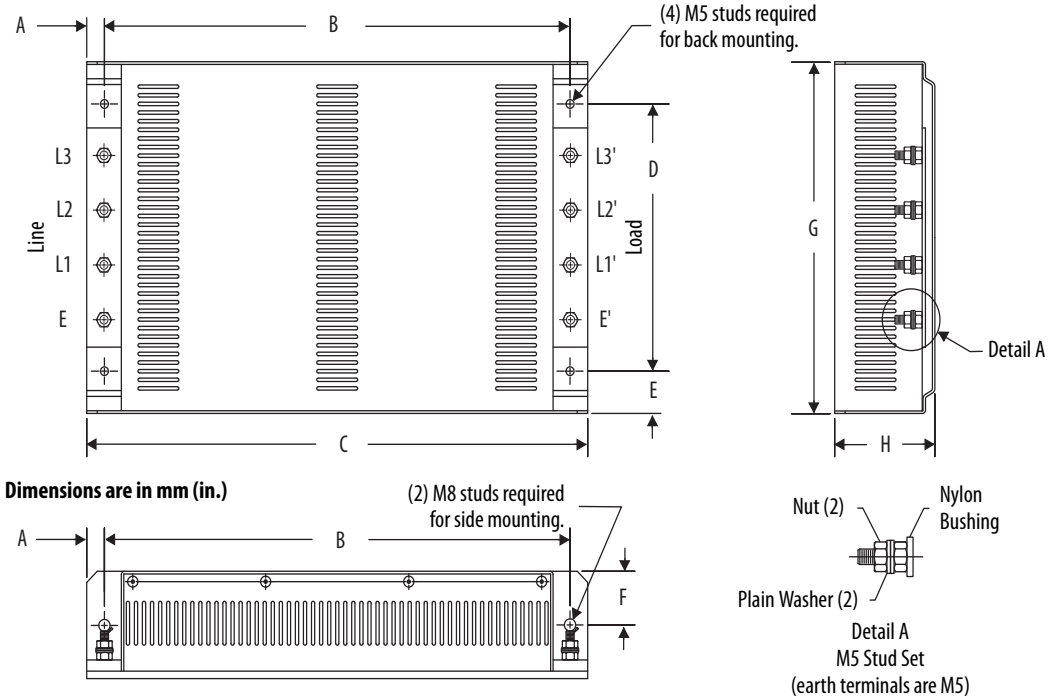

Cat. No.	A mm (in.)	B mm (in.)	C mm (in.)	D mm (in.)	E mm (in.)	F mm (in.)	G mm (in.)	H mm (in.)
2090-XXLF-X330B	15.0 (0.6)	330 (13.0)	360 (14.2)	155 (6.1)	20.0 (0.8)	32.5 (1.3)	195 (7.7)	65.0 (2.5)

AC Line Filter Dimensions

Dimensions are in mm (in.)

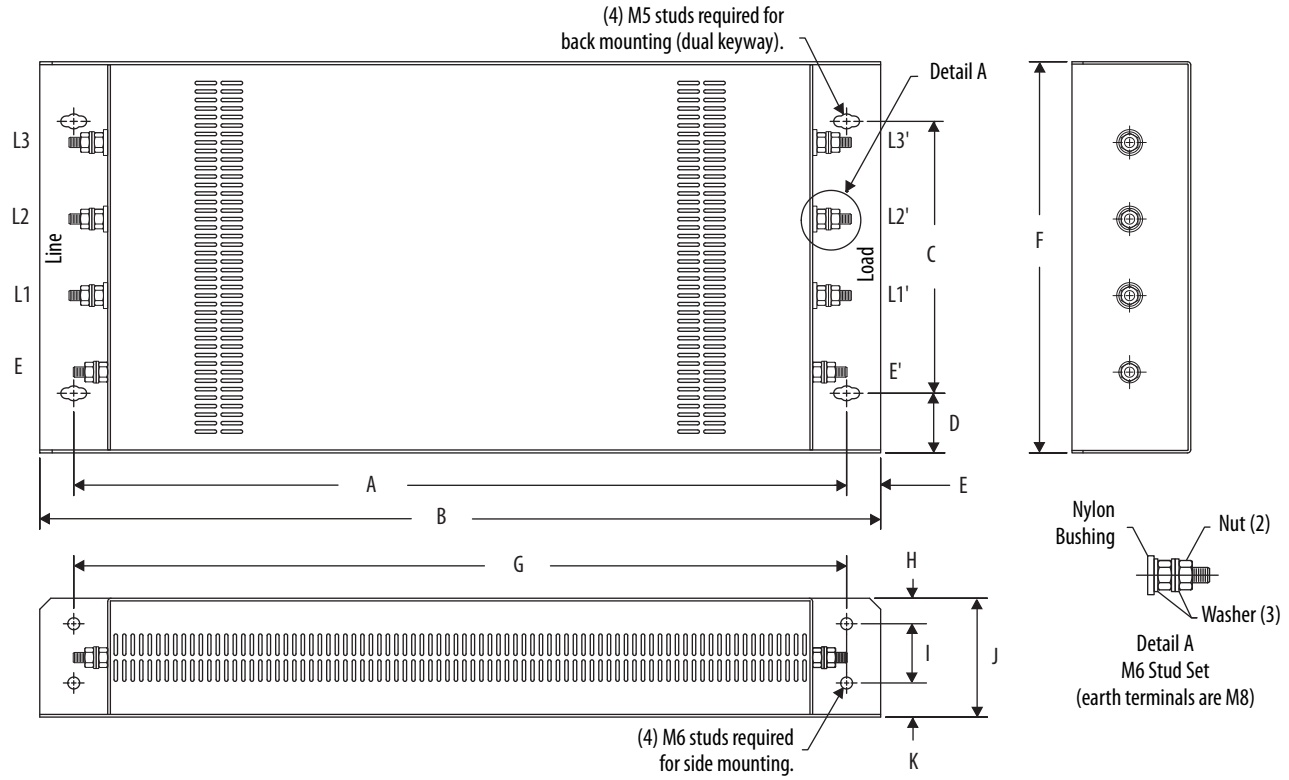

Cat. No.	A mm (in.)	B mm (in.)	C mm (in.)	D mm (in.)	E mm (in.)	F mm (in.)	G mm (in.)	H mm (in.)	I mm (in.)	J mm (in.)	K mm (in.)
2090-XXLF-375	646 (25.4)	686 (27.0)	192 (7.5)	35 (1.4)	20 (0.8)	262 (10.3)	646 (25.4)	15 (0.6)	35 (1.4)	70 (2.7)	20 (0.8)
2090-XXLF-375B											
2090-XXLF-3100	741 (29.2)	785 (30.9)	215 (8.4)	30 (1.2)	21.5 (0.85)	275 (10.8)	741 (29.2)		47 (1.8)	80 (3.1)	18 (0.7)

AC Line Filter Dimensions

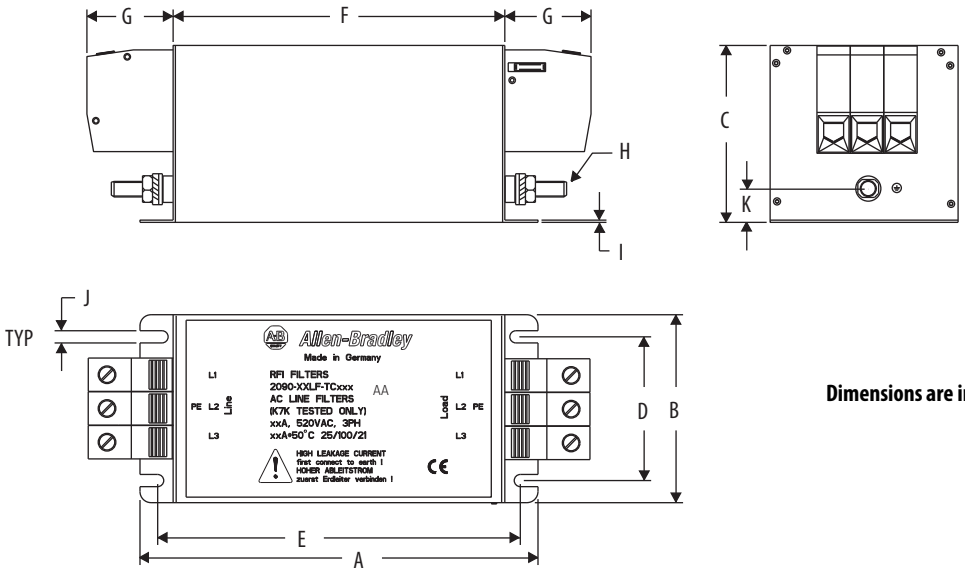

Dimensions are in mm (in.)

Cat. No.	A mm (in.)	B mm (in.)	C mm (in.)	D mm (in.)	E mm (in.)	F mm (in.)	G mm (in.)	H mm (in.)	I mm (in.)	J mm (in.)	K mm (in.)
2090-XXLF-TC316	230 (9.0)	50 (1.96)	80 (3.15)	25 (0.98)	215 (8.46)	200 (7.87)	12 (0.47)	M6x25	1.0 (0.04)	5.5 (0.21)	15 (0.59)
2090-XXLF-TC350	180 (7.08)	85 (3.35)		65 (2.56)	164 (6.45)	150 (5.90)	39 (1.53)				
2090-XXLF-TC365											
2090-XXLF-TC3100	240 (9.45)	95 (3.74)	90 (3.54)	75 (2.95)	223 (8.78)	210 (8.27)	43 (1.69)	M8x40	1.5 (0.06)	5.5 (0.21)	16 (0.63)

AC Line Filter Dimensions
(catalog numbers 2090-XXLF-TC3150 and 2090-XXLF-TC3200)

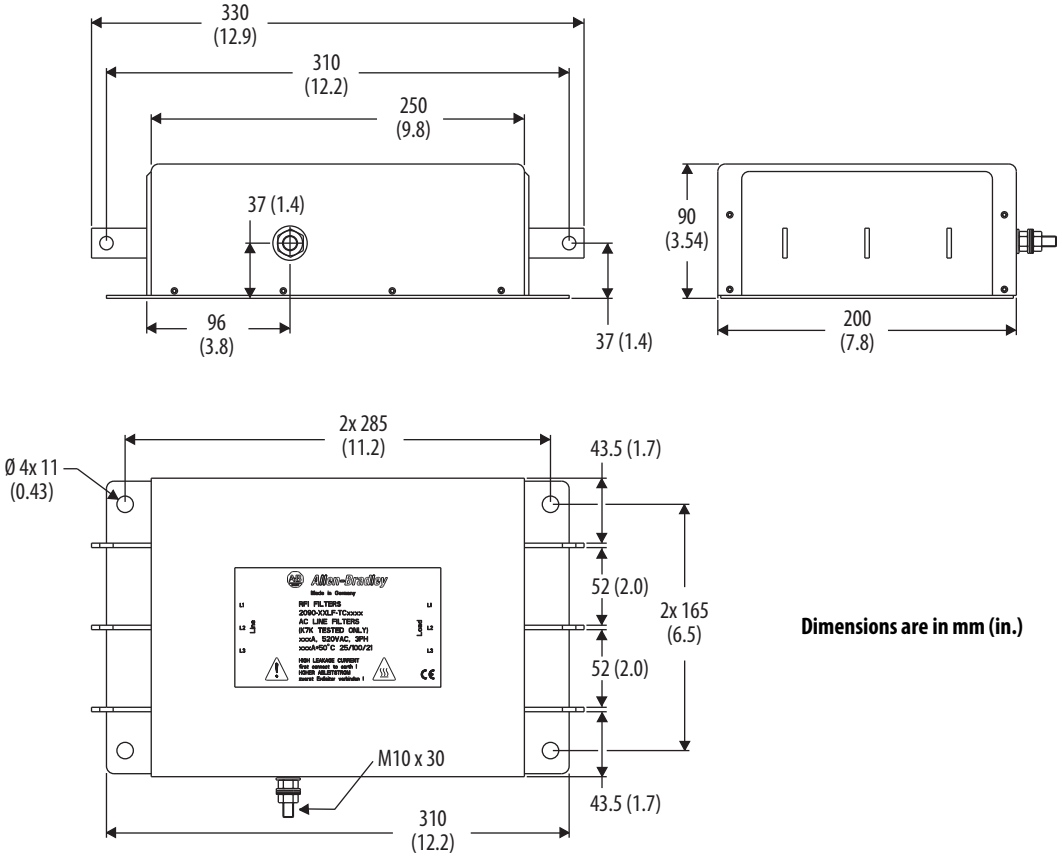

Dimensions are in mm (in.)

AC Line Filter Dimensions
(catalog number 2090-XXLF-TC116)

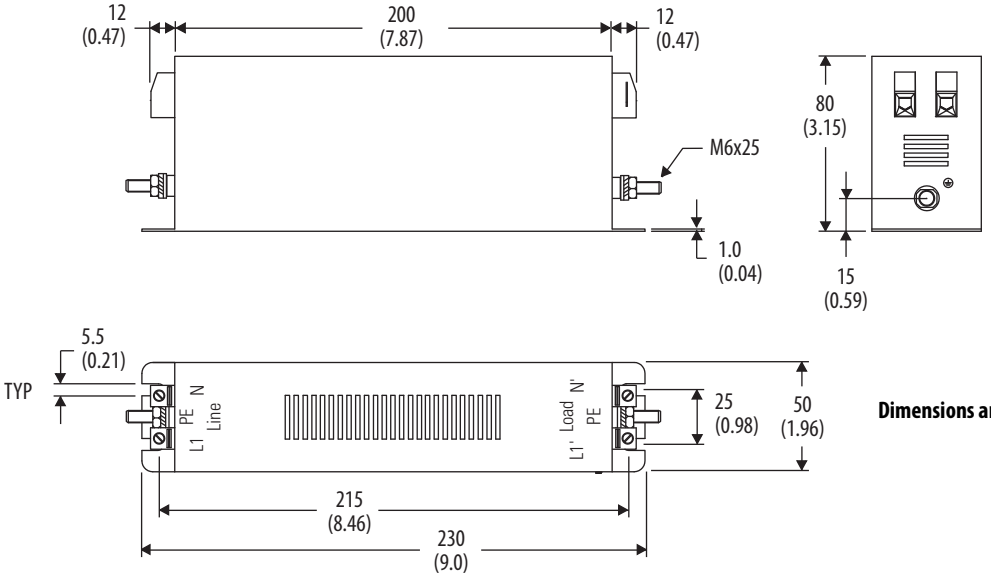

Dimensions are in mm (in.)

AC Line Filter (catalog number 8720MC-RFI80)

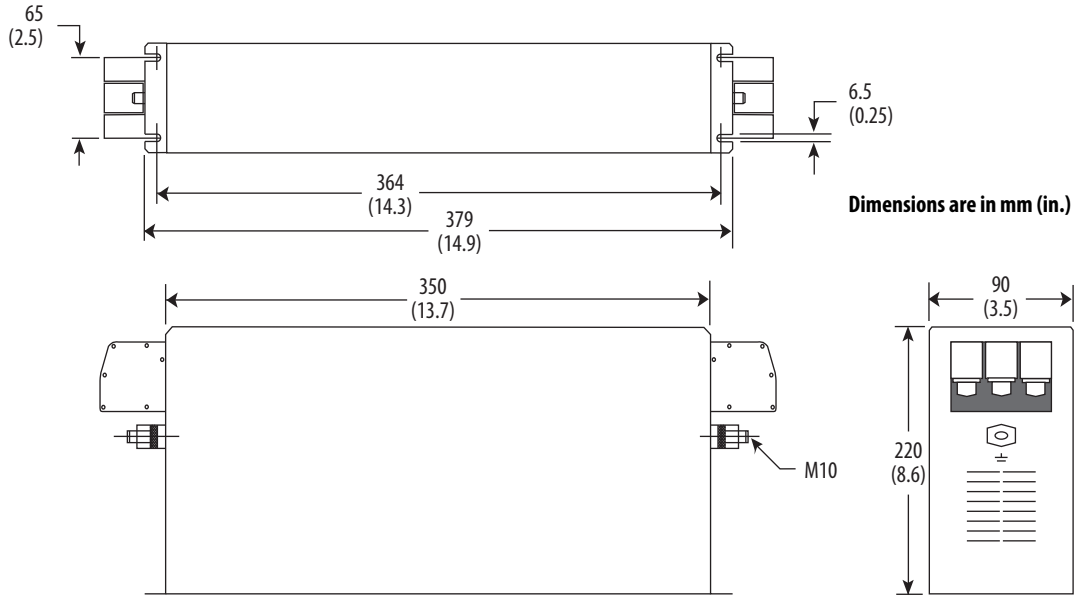

AC Line Filter (catalog number 8720MC-EF190)

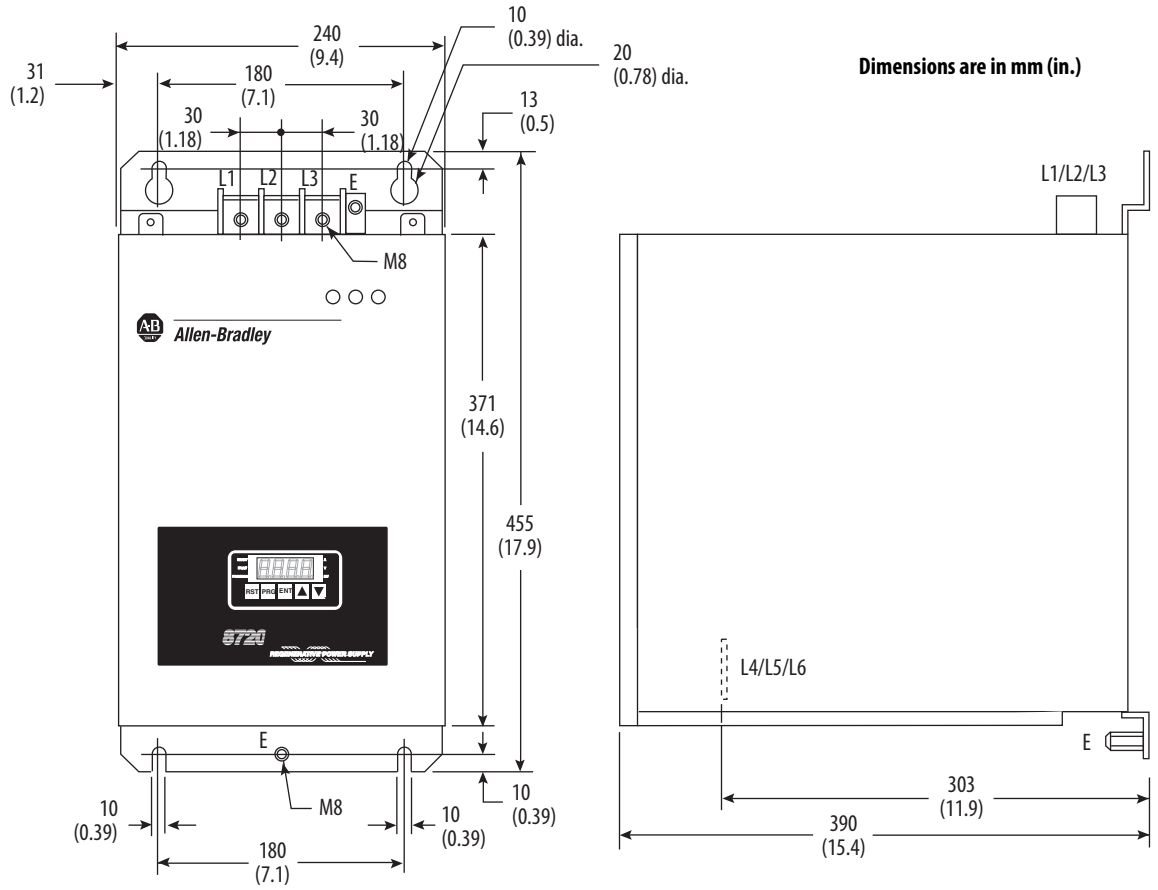

External Shunt Modules

This section contains external shunt module/resistor kit catalog numbers, specifications, and dimensions. Use these tables to match a shunt module to your servo drive system.

Refer to this table for active shunt solutions from Rockwell Automation Encompass™ partners.

Rockwell Automation Encompass Partners	Contact Information
Powerohm Resistors, Inc.	5713 13th Street Katy, Texas 77493 Tel: (800) 838-4694 http://www.powerohm.com
Bonitron, Inc.	521 Fairground Court, Nashville, TN 37211 Tel: (615) 244-2825 http://www.bonitron.com

For Bulletin 2097 shunt modules intended for use with Kinetix 300/350 servo drives, refer to Kinetix Servo Drives Technical Data, publication KNX-TD003.

Technical Specifications - Bulletin 1394 Passive Shunt Modules

Select one of these Bulletin 1394 passive shunt modules when your Kinetix 6000, Kinetix 6200 or Kinetix 6500 drive application exceeds the capacity of the internal (IAM/AM module) shunt resistor. These external passive shunt modules wire to the Kinetix 6000 (catalog number 2094-BSP2) shunt module.

External Shunt Cat. No.	Voltage Class	Resistance W	Peak Power kW	Peak Current A	Cont. Power W	Shipping Weight, approx kg (lb)	Bussmann Replacement Fuse
1394-SR9A	200V (1)	4	41.0	101.25	300	3.63 (8)	FNQ-R-20-R1 (1)
	400V		160	200			FWP50A14F
1394-SR9AF	200V (1)	4	41.0	101.25	900	3.63 (8)	FNQ-R-20-R1 (1)
	400V		160	200			FWP50A14F
1394-SR36A	200V (1)	4	41.0	101.25	1800	8.6 (19)	FNQ-R-20-R1 (1)
	400V		160	200			FWP50A14F
1394-SR36AF	200V (1)	4	41.0	101.25	3600	9.0 (20)	FNQ-R-25-R1 (1)
	400V		160	200			FWP50A14F

(1) Requires the use of an FNQ fuse with an adapter to allow the smaller body fuse to fit the larger FWP fuse holder.

Dimensions - Shunt Resistor Kits

Catalog Numbers 1394-SR9A and 1394-SR9AF

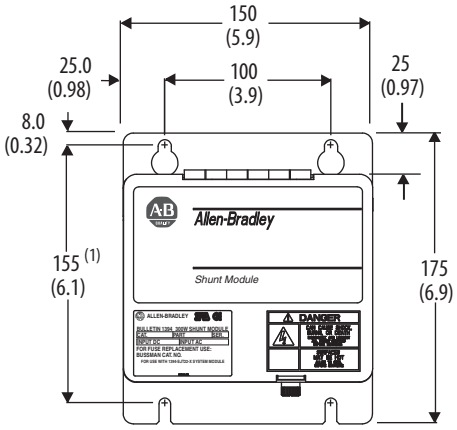

Front View

Mounting Hole Detail

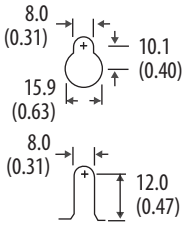

All slots accept M6 or 1/4-20 mounting screws.

(1) Dimension shown is for mounting hardware location and does not reflect the location of the lower slot radius.

Dimensions are in mm (in.)

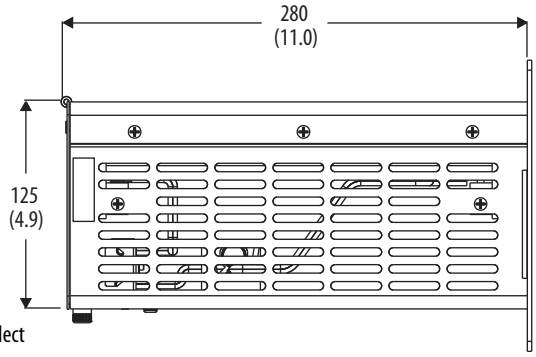

Side View

Catalog Numbers 1394-SR36A and 1394-SR36AF

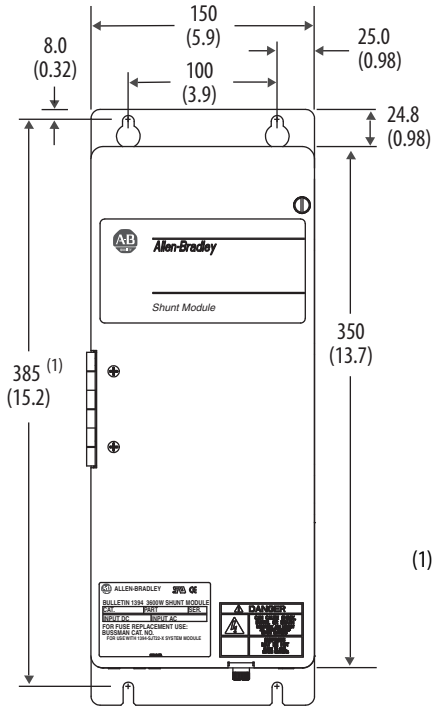

Front View

Mounting Hole Detail

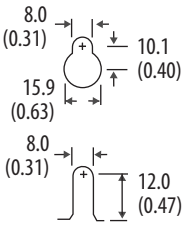

All slots accept M6 or 1/4-20 mounting screws.

(1) Dimension shown is for mounting hardware location and does not reflect the location of the lower slot radius.

Dimensions are in mm (in.)

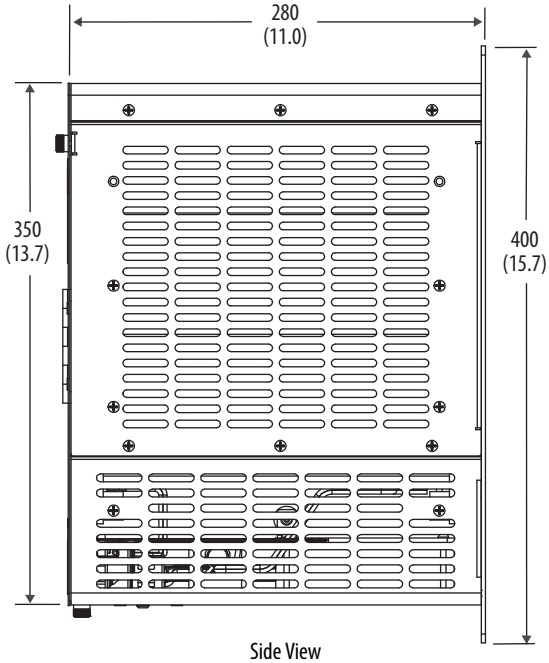

Side View

Resistive Brake Modules

The RBM module provides the opportunity to design safety controls into a machine's drive system with two key features:

- Physically and electrically separate the drive power output from its corresponding motor.
- Reduce the stopping time for a motor and its load, if a failure occurs.

Resistive Brake Module Features and Indicators

Catalog Numbers 2090-XB33-*xx* and 2090-XB120-*xx*

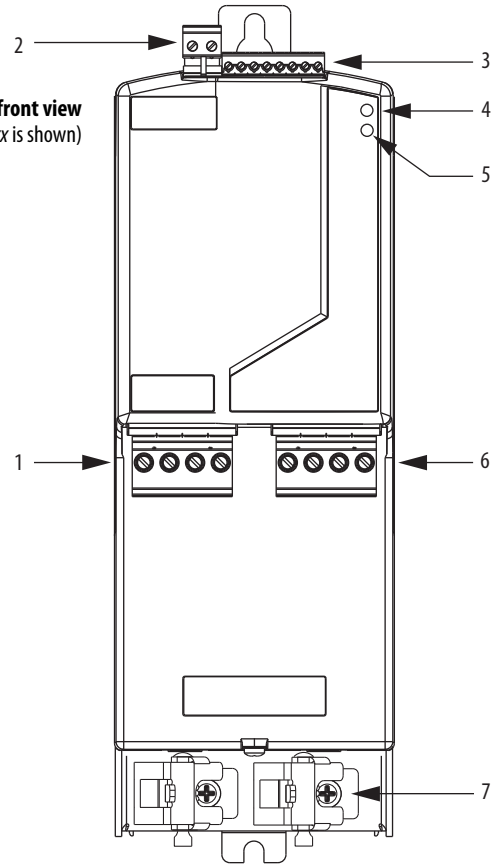

Resistive Brake Module, front view
(catalog number 2090-XB120-*xx* is shown)

Item	Description
1	Drive connections (TB1) connector
2	230V AC auxiliary power input (TB4) connector (1)
3	I/O connections (TB3) connector
4	Contactor status indicator
5	Auxiliary power status indicator (1)
6	Motor connections (TB2) connector
7	Motor cable shield clamps

(1) The 230V AC auxiliary power input (TB4) connector and auxiliary power status indicator are present on only 2090-XB120-*xx* resistive brake modules.

RBM Module to Servo Drive Interface Cables

RBM module interface cables (motor power, RBM to drive) are available for Kinetix 6000, Kinetix 6200, and Kinetix 6500 servo drives. Refer to the table below for specific RBM to drive interface cable information.

For This Information	Refer to
Cable catalog numbers for compatible drives	page 57
Available cable lengths	page 57
Cable specifications	page 58
Cable dimensions	page 60

Technical Specifications - Resistive Brake Modules

Cat. No.	Voltage Class	Resistance (1) W	Peak Energy J	Peak Drive Current		Continuous Power W	Weight, approx kg (lb)
				A 0-pk	A rms		
2090-XB33-32	200V or 400V	32	150	33	23	30	1.91 (4.22)
2090-XB33-16		16					
2090-XB120-06		6	290	106	75	45	2.75 (6.06)
2090-XB120-03		3					
2090-XB120-01		1					

(1) Tolerance = ± 10%.

Use Motion Analyzer software to match an RBM module to your servo motor compatible with Kinetix 2000, Kinetix 6000, Kinetix 6200, and Kinetix 6500 drive systems.

IMPORTANT Drive commands are the preferred and quickest method to bring your drive system to a controlled stop. When using drive commands, the time between braking cycles is limited by the drive/motor/load combination. When the RBM resistors are used to stop the motor, these conditions apply:

- One minute between braking cycles
- Maximum 15:1 motor inertia
- Maximum motor velocity at the start of braking
- Application must not exceed the current rating of the brake module

Typical RBM Module Curve

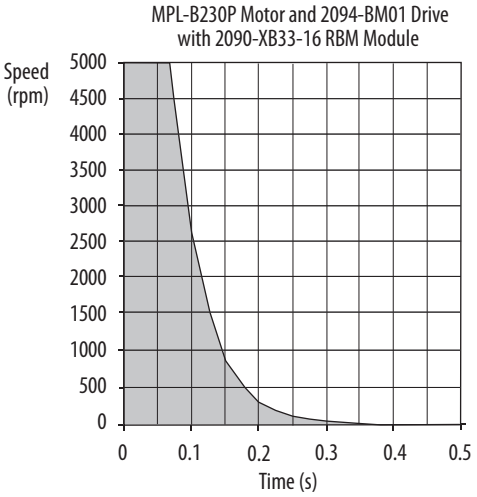

Dimensions - Resistive Brake Modules

Catalog Numbers 2090-XB33-16 and 2090-XB33-32

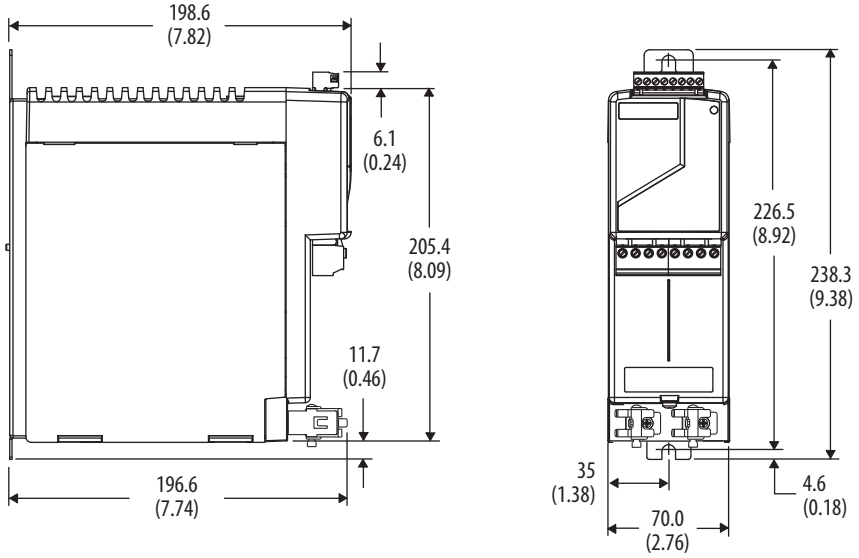

Dimensions are in mm (in.)

Catalog Numbers 2090-XB120-01, 2090-XB120-03, and 2090-XB120-06

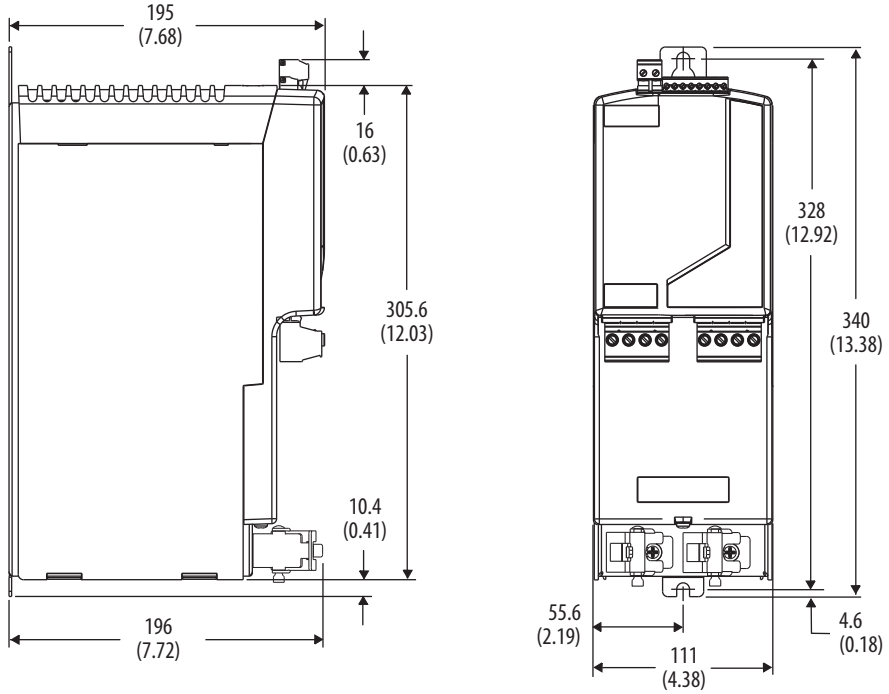

Dimensions are in mm (in.)

8720MC Regenerative Power Supplies

This section contains catalog numbers, specifications, and dimensions for the 8720MC-RPS*xxx* regenerative power supplies. The 8720MC-RPS modules are compatible with Kinetix 5700, Kinetix 6200, Kinetix 6500, Kinetix 6000, and Kinetix 7000 drives when used in DC common-bus applications. Refer to Kinetix Servo Drive Specifications, publication KNX-TD003, for sizing Bulletin 8720MC power components with Kinetix 7000 drives.

The 8720MC regenerative power supplies support these features:

- Full line regeneration
- Regenerative braking
- Multiple DC common-bus drives
- Leader and Follower modes for parallel operation of multiple units
- Adjustable DC output voltage
- CE compliance and UL Listed to U.S. and Canadian safety standards

Refer to 8720MC Regenerative Power Supply User Manual, publication 8720MC-RM001, for additional product specifications.

8720MC Regenerative Power Supply Features and Indicators

Catalog Number 8720MC-RPS065

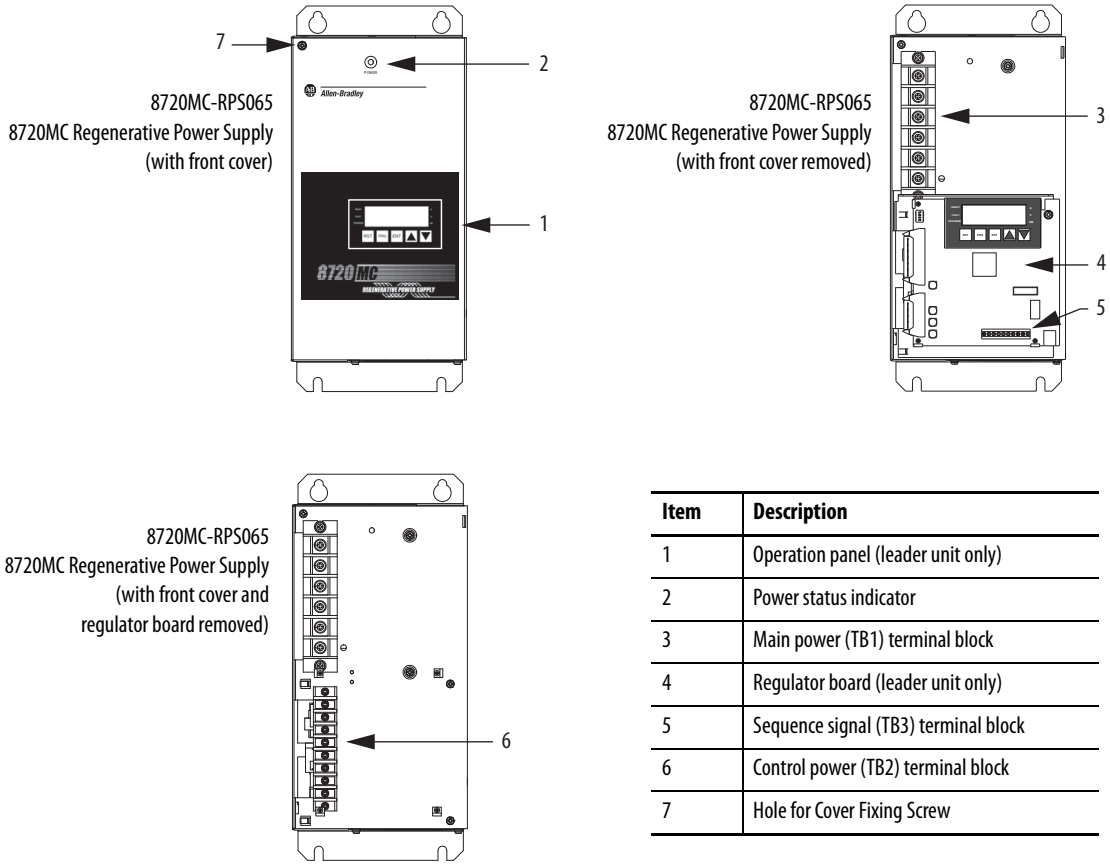

Item	Description
1	Operation panel (leader unit only)
2	Power status indicator
3	Main power (TB1) terminal block
4	Regulator board (leader unit only)
5	Sequence signal (TB3) terminal block
6	Control power (TB2) terminal block
7	Hole for Cover Fixing Screw

Catalog Number 8720MC-RPS190 (series #)

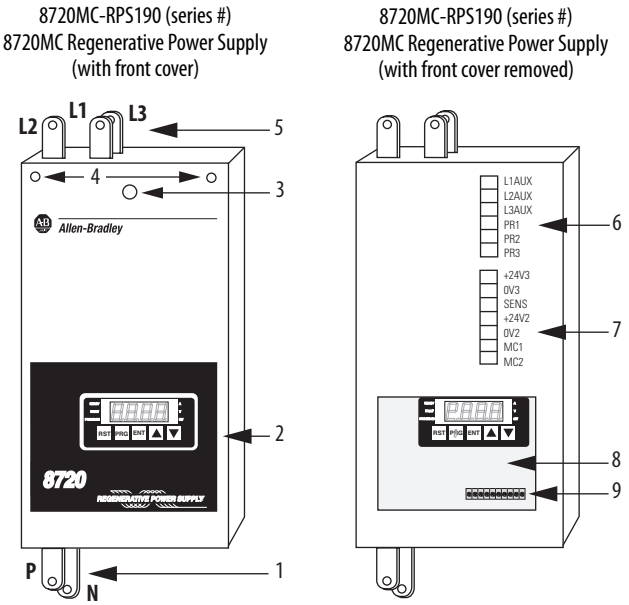

Item	Description
1	DC bus output terminals
2	Operation panel (leader unit only)
3	Power status indicator
4	Holes for cover fixing screws
5	Main power terminals
6	Control power (TB2) terminal block
7	Control power (TB4) terminal block
8	Regulator board (master unit only)
9	Sequence signal (TB3) terminal block

Catalog Number 8720MC-RPS190 (series B)

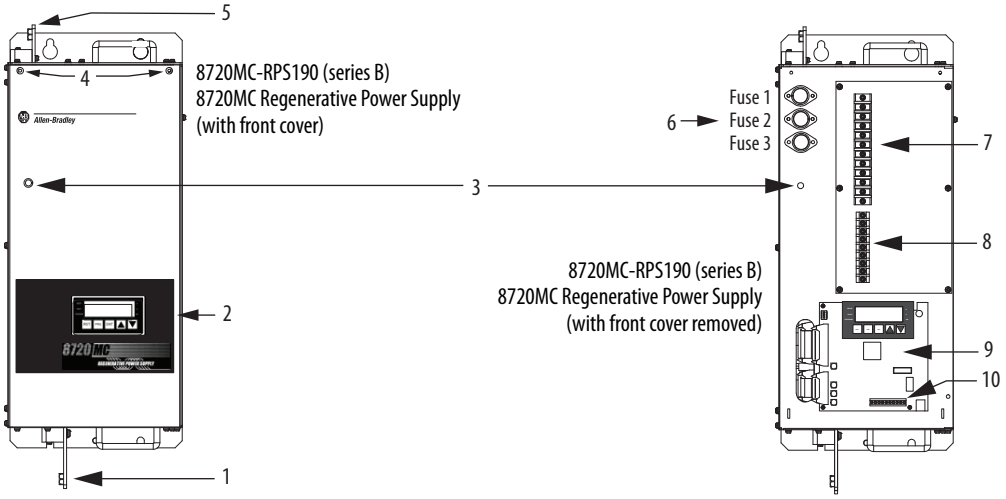

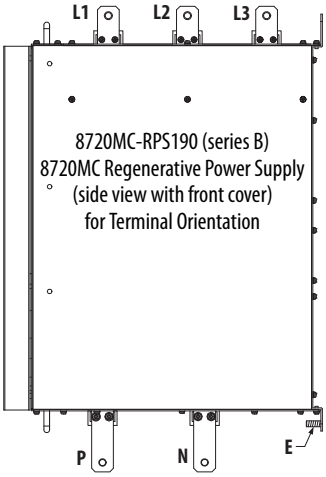

Item	Description
1	DC-bus output terminals
2	Operation panel (leader unit only)
3	Power status indicator
4	Holes for cover fixing screws
5	Mains power terminals
6	Circuit protection
7	Control power (TB2) terminal block
8	Control power (TB4) terminal block
9	Regulator board (leader unit only)
10	Sequence signal (TB3) terminal block

Technical Specifications - 8720MC Regenerative Power Supplies

8720MC-RPS Power Specifications

Attribute	8720MC-RPS065		8720MC-RPS190	
AC input voltage	324…506V AC rms three-phase			
AC input frequency	47…63 Hz			
AC input current Nom Max (1 minute)	 65 A rms 98 A rms	 92 A 0-pk 138 A 0-pk	 190 A rms 285 A rms	 268 A 0-pk 403 A 0-pk
Continuous output current	64 A_{DC}		190 A_{DC}	
Output current (1 minute)	96 A		285 A	
Weight, kg (lb)	13.5 (29.7)		39.0 (86.8)	

This table lists internal (built-in) and external precharge capacitance for the 8720MC-RPS units.

8720MC-RPS Precharge Specifications

Attribute	8720MC-RPS065		8720MC-RPS190	
	Series #	Series B	Series #	Series B
Capacitance of built-in capacitor	1900 µF	1960	7600 µF	5600 µF
Built-in resistor (value/wattage)	7000 µF (22 Ω/120 W)		25,000 µF (10 Ω/400 W)	
External resistor (min resistance value) Connect to PR1 and PR2	110,000 µF (20 Ω)		165,000 µF (10 Ω)	
External circuit (min resistance value)	220,000 µF (4.7 Ω)		495,000 µF (1.5 Ω)	

IMPORTANT Large levels of load capacitance can require modification of the 8720MC-RPS internal precharge/discharge circuit. Refer to the wiring instructions in the 8720MC Regenerative Power Supply User Manual, publication 8720MC-RM001, for information on how to determine the appropriate precharge/discharge resistance power value (ohms/watt) to accommodate the capacitance of your system.

Refer to 8720MC Regenerative Power Supply User Manual, publication 8720MC-RM001, for additional product specifications.

Dimensions - 8720MC Regenerative Power Supplies

Catalog Number 8720MC-RPS065

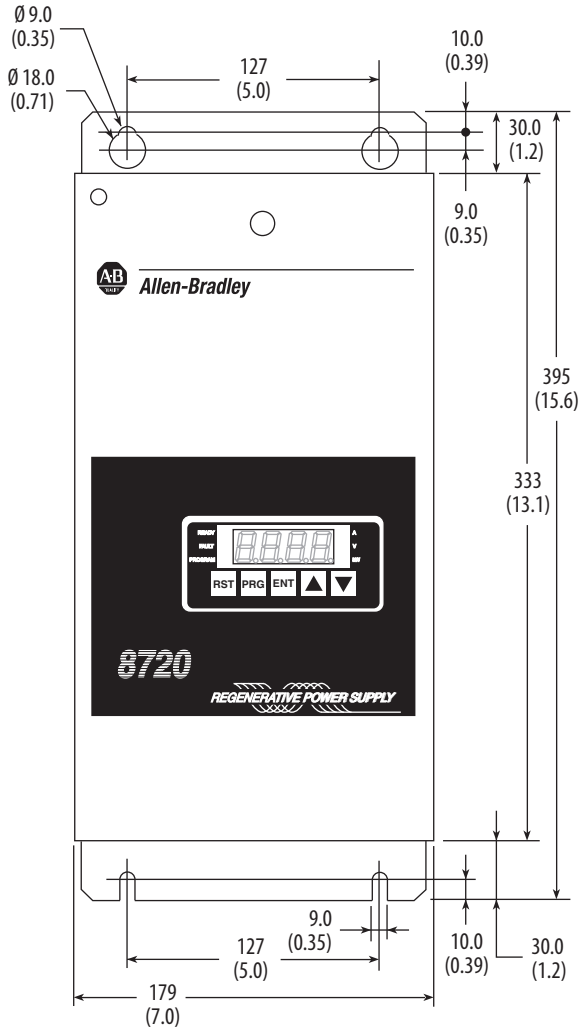

Dimensions are in mm (in.)

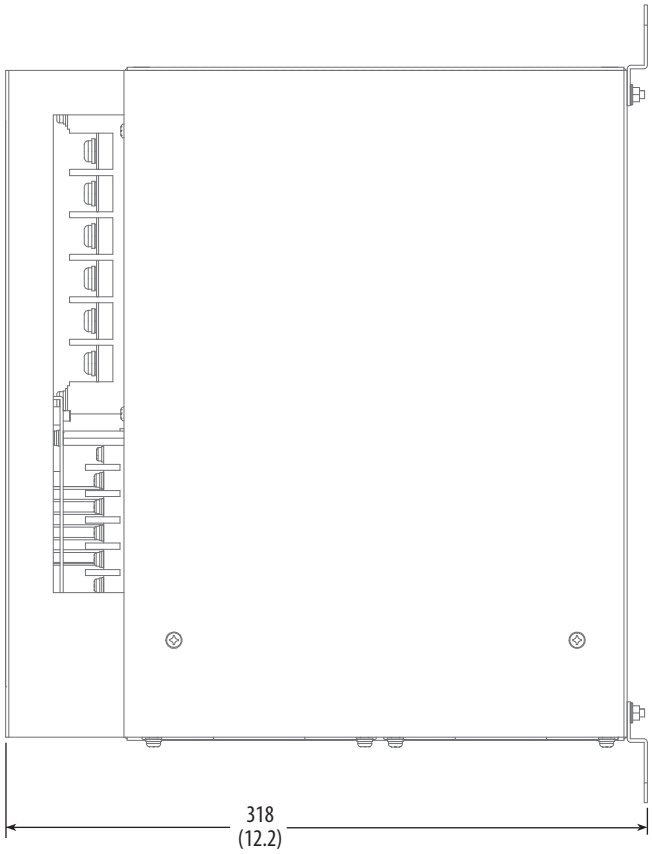

Catalog Number 8720MC-RPS190 (series #)

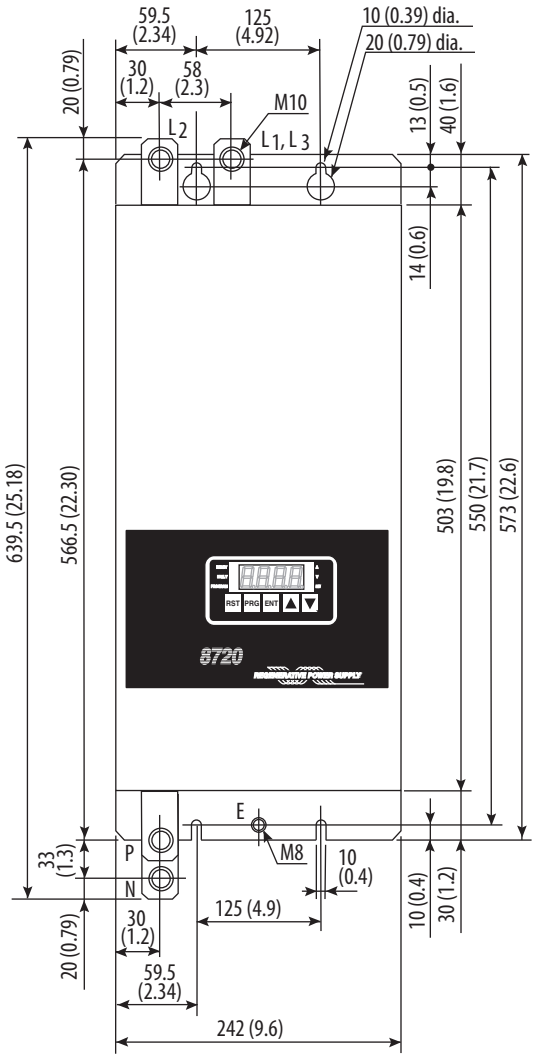

Dimensions are in mm (in.)

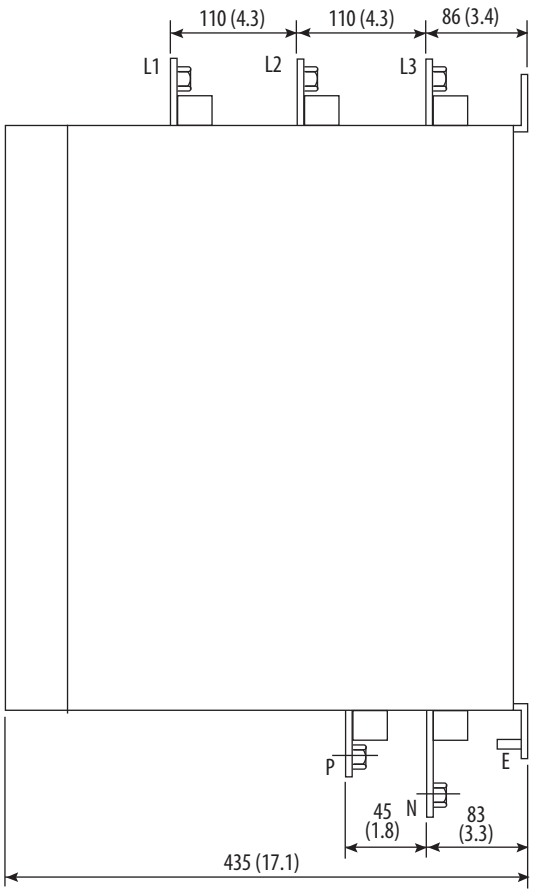

Catalog Number 8720MC-RPS190 (series B)

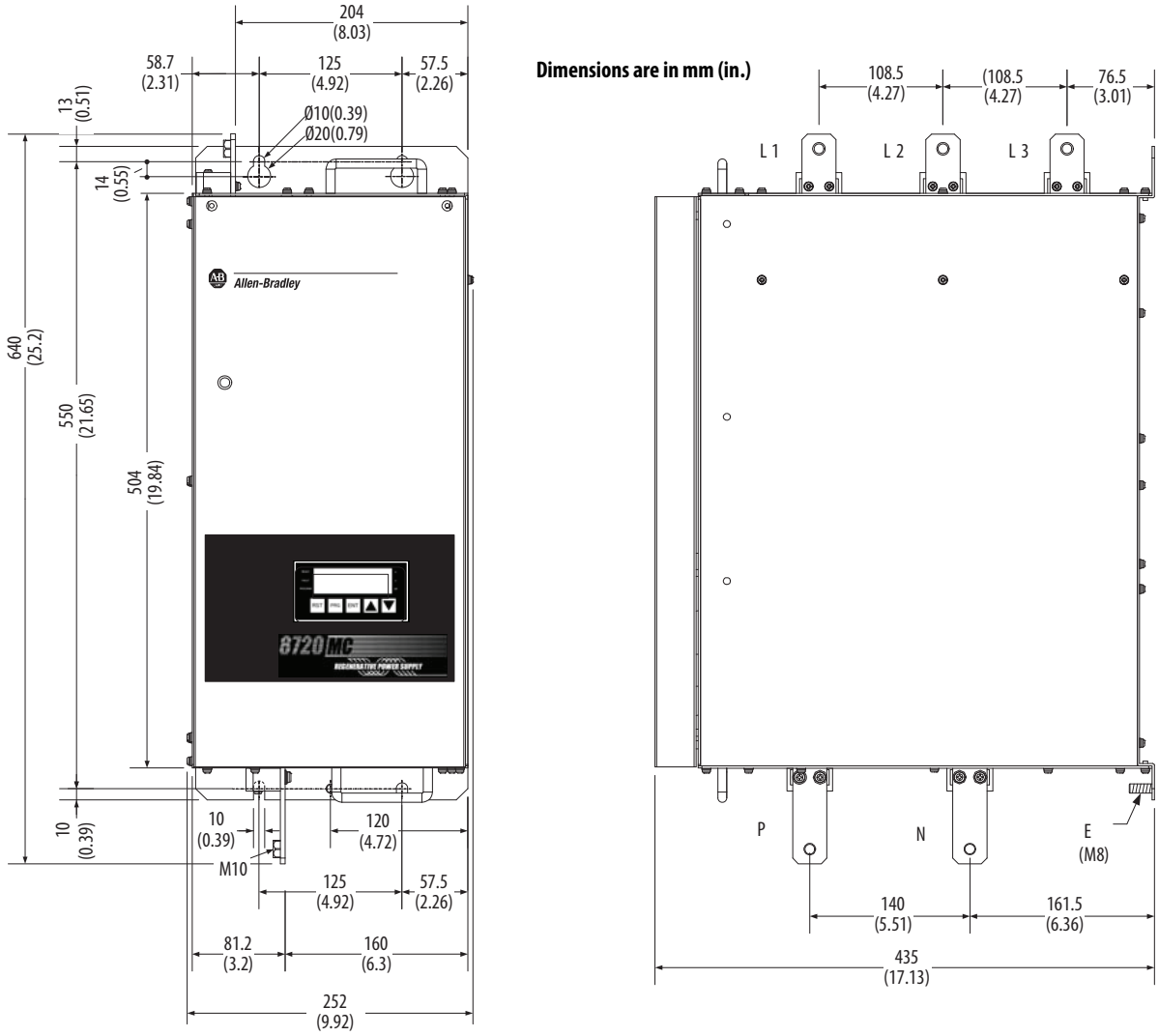

8720MC Line Reactors

This section contains catalog numbers, specifications, and dimensions for the 8720MC line reactors.

Technical Specifications - 8720MC Line Reactors

8720MC Line Reactors for 8720MC-RPS065 Units

Line Reactors [(1)] Cat. No.	Continuous Current, max A	Inductance uH	Capacity of Motor, max kW	Weight, approx kg (lb)
8720MC-LR03-032B	32	850	15	17 (37.48)
8720MC-LR05-048B	48	800	22	21 (46.29)
8720MC-LR10-062B	62	1100	30	27 (59.52)
8720MC-LR14-070B	70	1200	37	38 (83.77)

(1) Provide the required quantity of reactors for all units connected in parallel (refer to 8720MC Regenerative Power Supply User Manual, publication 8720MC-RM001).

8720MC Line Reactors for 8720MC-RPS190 Units

Line Reactors (1) Cat. No.	Quantity	Continuous Current, max A	Inductance uH	Capacity of Motor, max kW	Weight, approx kg (lb)
8720MC-LR10-100B	1	100	800	65	100 (220)
	2	190		125	

(1) Order two 8720MC-LR10-100B line reactor units and wire in parallel for 200 A rating when used with the 8720MC-RPS190-RPS modules.

Dimensions - 8720MC Line Reactors

Catalog Numbers 8720MC-LR03-032B, 8720MC-LR048B, 8720MC-LR062B, and 8720MC-LR070B

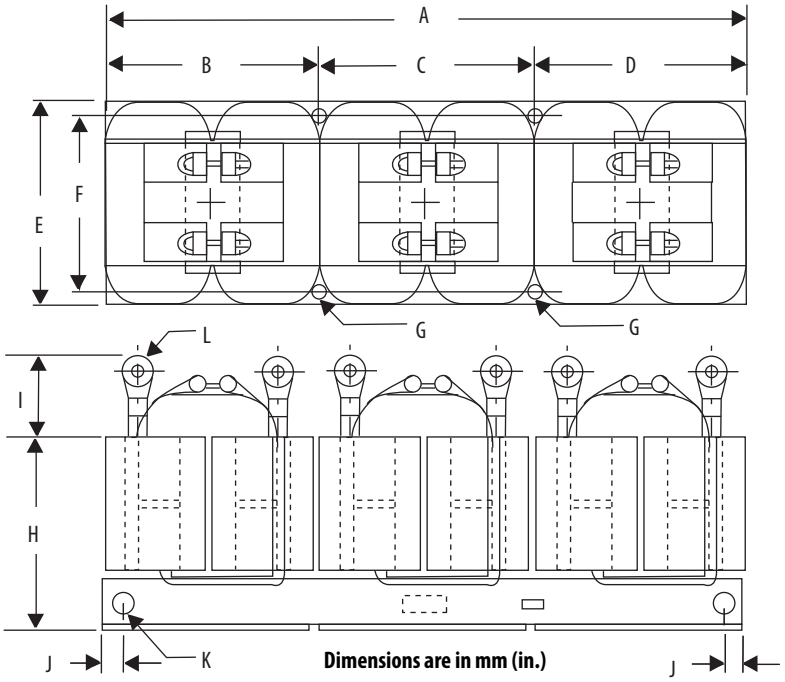

Line Reactors Cat. No.	A (1) mm (in.)	B mm (in.)	C (2) mm (in.)	D mm (in.)	E mm (in.)	F (3) mm (in.)	G mm (in.)	H (4) mm (in.)	I (5) mm (in.)	J mm (in.)	K mm (in.)	Pressure Terminal mm (in.)
8720MC-LR03-032B	345 (13.58)	112.5 (4.43)	120 (4.72)	112.5 (4.43)	140 (5.51)	100 (3.94)	4…7 (0.15…0.27)	127 (5.0)	80 (3.14)	15 (0.59)	4…15 (0.15…0.59)	6-(R22-6) (0.23)
8720MC-LR05-048B	400 (15.74)	132.5 (5.21)	135 (5.31)	132.5 (5.21)	155 (6.10)	105 (4.13)		125 (4.92)				
8720MC-LR10-062B	440 (17.32)	145 (5.70)	150 (5.90)	145 (5.70)	160 (6.29)	110 (4.33)	4…9.5 (0.15…0.37)	125 (4.92)				
8720MC-LR14-070B	460 (18.11)	155 (6.10)	150 (5.90)	155 (6.10)	180 (7.08)	125 (4.92)		140 (5.51)				

(1) The tolerance is ±2 mm (0.07 in.).
(2) The tolerance is ±1 mm (0.03 in.).
(3) The tolerance is +1 mm, -5 mm (+0.03 in. -0.19 in.).
(4) The tolerance is ±5 mm (0.19 in.).
(5) The tolerance is ±10 mm (0.39 in.).

Catalog Number 8720MC-LR10-100B

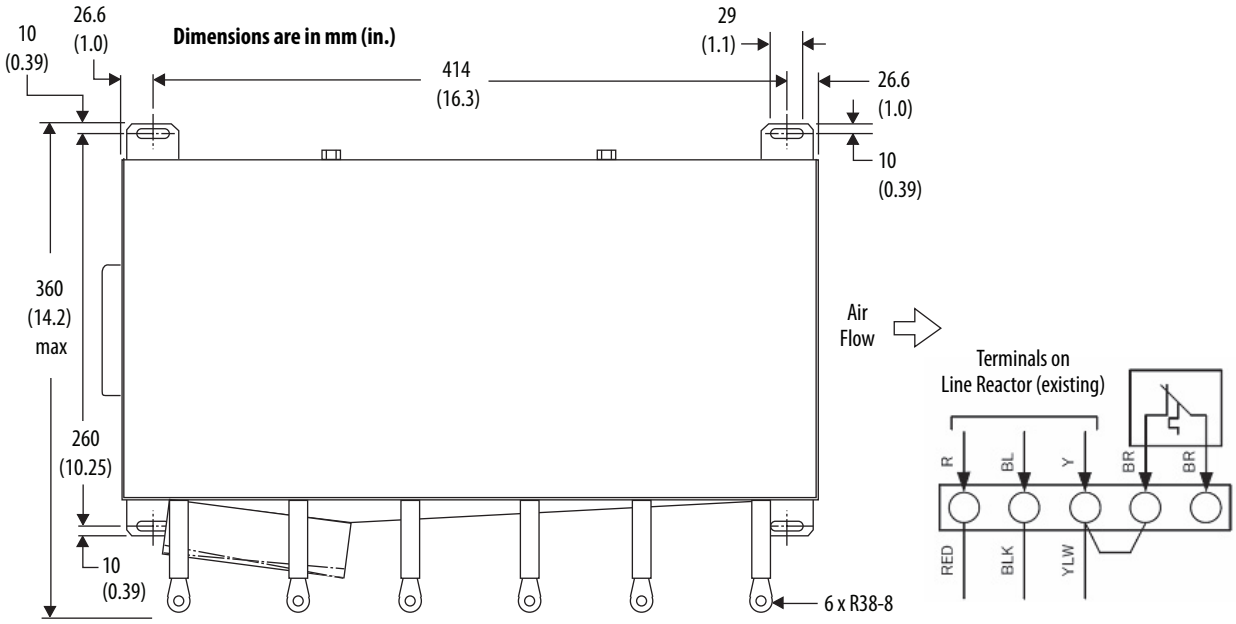

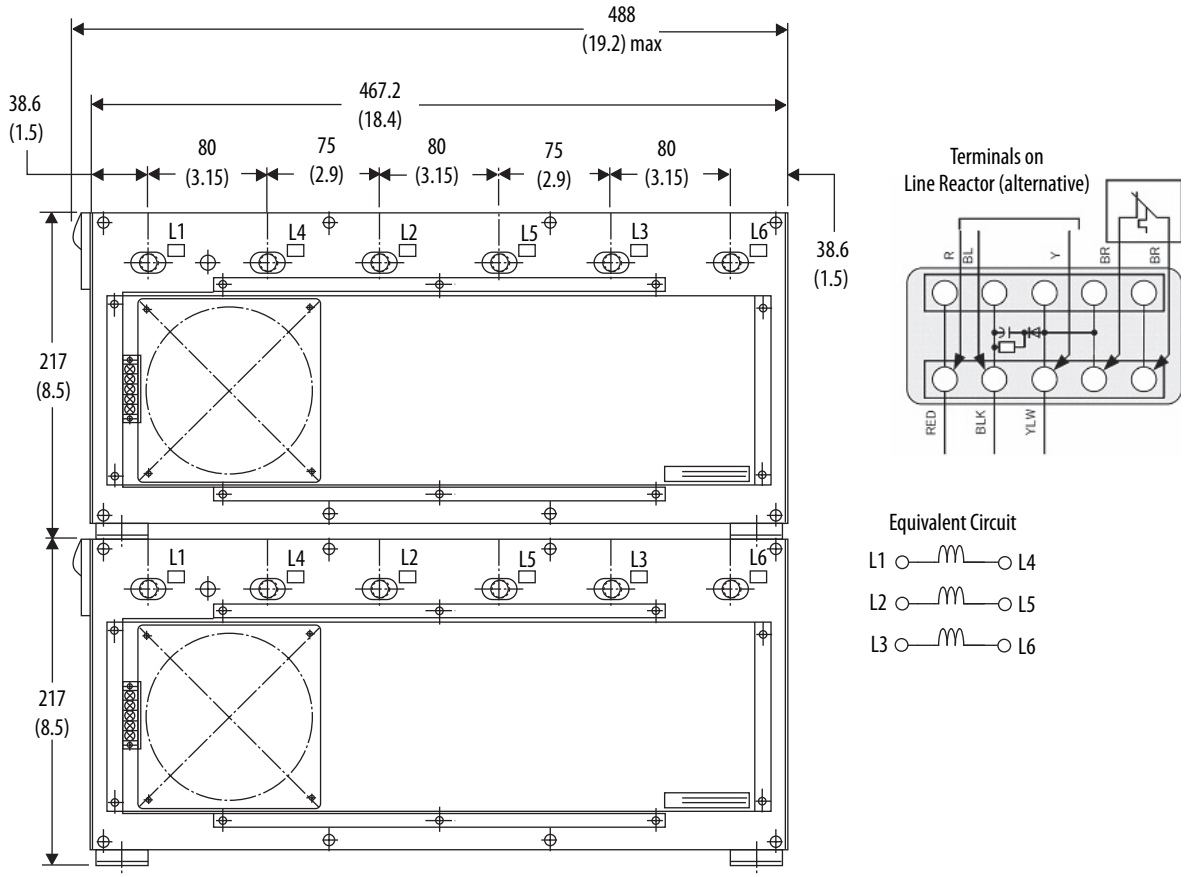

Shown are two 8720MC-LR10-100B units in a typical configuration for use with the 8720MC-RPS190 unit.

Additional Resources

These documents contain additional information concerning related products from Rockwell Automation.

Additional Resources

Resource	Description
Kinetix Rotary Motion Specifications, publication KNX-TD001	Provides product specifications for MP-Series (Bulletin MPL, MPM, MPF, MPS), Kinetix 6000M (Bulletin MDF), TL-Series, RDD-Series, and HPK-Series rotary motors.
Kinetix Linear Motion Specifications, publication KNX-TD002	Provides product specifications for Bulletin MPAS and MPMA linear stages, Bulletin MPAR and MPAI Electric Cylinders, and LDC-Series and LDL-Series linear motors.
Kinetix Servo Drives Specifications, publication KNX-TD003	Provides product specifications for Kinetix Integrated Motion over the EtherNet/IP network, Integrated Motion over Sercos interface, EtherNet/IP networking, and component servo drive families.
Kinetix Motion Control Selection Guide, publication KNX-SG001	Provides an overview of Kinetix servo drives, motors, actuators, and motion accessories designed to help make initial decisions for the motion control products best suited for your system requirements.
Kinetix 5700 Drive Systems, publication KNX-RM010	Provides system design guide to determine and select the required (drive specific) drive module, power accessory, connector kit, motor cable, and interface cable catalog numbers for your drive and motor/actuator motion control system. Included are system performance specifications and torque/speed curves (rotary motion) and force/velocity curves (linear motion) for your motion application.
Kinetix 5500 Drive Systems, publication KNX-RM009	
Kinetix 6000 and Kinetix 6200/6500 Drive Systems, publication KNX-RM003	
Kinetix 300/350 Drive Systems, publication KNX-RM004	
Kinetix 3 Drive Systems, publication GMC-RM005	
Kinetix 2000 Drive Systems, publication GMC-RM006	
Kinetix 7000 Drive Systems, publication GMC-RM007	
Kinetix 5700 Servo Drives User Manual, publication 2198-UM002	Provides information on installing, configuring, startup, and troubleshooting your Kinetix servo drive system.
Kinetix 5500 Servo Drives User Manual, publication 2198-UM001	
Kinetix 6200 and Kinetix 6500 Modular Multi-axis Servo Drives User Manual, publication 2094-UM002	
Kinetix 6000 Multi-axis Servo Drives User Manual, publication 2094-UM001	
Kinetix 7000 High Power Servo Drives User Manual, publication 2099-UM001	
Kinetix 2000 Multi-axis Servo Drives User Manual, publication 2093-UM001	
Kinetix 300 EtherNet/IP Indexing Servo Drives User Manual, publication 2097-UM001	
Kinetix 350 Single-axis EtherNet/IP Servo Drives User Manual, publication 2097-UM002	
Kinetix 3 Component Servo Drives User Manual, publication 2071-UM001	
Kinetix 6200 and Kinetix 6500 Safe Speed Monitoring Servo Drives Safety Reference Manual, publication 2094-RM001	Provides information on wiring, configuring, and troubleshooting the safe-speed features of your Kinetix 6200 and Kinetix 6500 drives.
Kinetix 6200 and Kinetix 6500 Safe Torque-off Servo Drives Safety Reference Manual, publication 2094-RM002	Provides information on wiring, configuring, and troubleshooting the safe torque-off features of your Kinetix 6200 and Kinetix 6500 drives.
Kinetix Safe-off Feature Safety Reference Manual, publication GMC-RM002	Provides information on wiring and troubleshooting your Kinetix 6000 and Kinetix 7000 servo drives with the safe-off feature.
System Design for Control of Electrical Noise Reference Manual, publication GMC-RM001	Provides information, examples, and techniques designed to minimize system failures caused by electrical noise.
ControlLogix Selection Guide, publication 1756-SG001	Provides information to determine which ControlLogix controller fits your application and the product specifications to help design a ControlLogix system and select the appropriate components.
CompactLogix Selection Guide, publication 1769-SG001	Provides information to determine which CompactLogix controller fits your application and the product specifications to help design a CompactLogix system and select the appropriate components.

Additional Resources (continued)

Resource	Description
Industrial Ethernet Media Brochure, publication 1585-BR001	Provides information to determine which Bulletin 1585 Ethernet cable fits your application and the product specifications to help select the appropriate components.
Motion Analyzer System Sizing and Selection Tool https://motionanalyzer.rockwellautomation.com/	Provides comprehensive motion application sizing tool used for analysis, optimization, selection, and validation of your Kinetix Motion Control system.
Rockwell Automation Product Selection website http://www.rockwellautomation.com/global/support/selection.page	Provides online product selection and system configuration tools, including AutoCAD (DXF) drawings.
Product Certifications website, rok.auto/certifications	Provides declarations of conformity, certificates, and other certification details.

You can view or download publications at http://www.rockwellautomation.com/global/literature-library/overview.page.

Rockwell Automation Support

Use the following resources to access support information.

Technical Support Center	Knowledgebase Articles, How-to Videos, FAQs, Chat, User Forums, and Product Notification Updates.	https://rockwellautomation.custhelp.com/
Local Technical Support Phone Numbers	Locate the phone number for your country.	http://www.rockwellautomation.com/global/support/get-support-now.page
Direct Dial Codes	Find the Direct Dial Code for your product. Use the code to route your call directly to a technical support engineer.	http://www.rockwellautomation.com/global/support/direct-dial.page
Literature Library	Installation Instructions, Manuals, Brochures, and Technical Data.	http://www.rockwellautomation.com/global/literature-library/overview.page
Product Compatibility and Download Center (PCDC)	Get help determining how products interact, check features and capabilities, and find associated firmware.	http://www.rockwellautomation.com/global/support/pcdc.page

Documentation Feedback

Your comments will help us serve your documentation needs better. If you have any suggestions on how to improve this document, complete the How Are We Doing? form at http://literature.rockwellautomation.com/idc/groups/literature/documents/du/ra-du002_-en-e.pdf.

Rockwell Automation maintains current product environmental information on its website at http://www.rockwellautomation.com/rockwellautomation/about-us/sustainability-ethics/product-environmental-compliance.page.

Allen-Bradley, CompactLogix, ControlLogix, Encompass, HPK-Series, Kinetix, LDC-Series, LDL-Series, LISTEN. THINK. SOLVE., Logix 5000, MicroLogix, MP-Series, On-Machine, PanelView, RDD-Series, Rockwell Automation, Rockwell Software, RSLogix 5000, Stratix, Studio 5000 Logix Designer, and TL-Series are trademarks of Rockwell Automation, Inc.

EtherNet/IP is a trademark of ODVA, Inc.

Trademarks not belonging to Rockwell Automation are property of their respective companies.

Rockwell Otomasyon Ticaret A.Ş., Kar Plaza İş Merkezi E Blok Kat:6 34752 İçerenköy, İstanbul, Tel: +90 (216) 5698400

www.rockwellautomation.com

Power, Control and Information Solutions Headquarters

Americas: Rockwell Automation, 1201 South Second Street, Milwaukee, WI 53204-2496 USA, Tel: (1) 414.382.2000, Fax: (1) 414.382.4444

Europe/Middle East/Africa: Rockwell Automation NV, Pegasus Park, De Kleetlaan 12a, 1831 Diegem, Belgium, Tel: (32) 2 663 0600, Fax: (32) 2 663 0640

Asia Pacific: Rockwell Automation, Level 14, Core F, Cyberport 3, 100 Cyberport Road, Hong Kong, Tel: (852) 2887 4788, Fax: (852) 2508 1846

Publication KNX-TD004E-EN-P - February 2019

Supersedes Publication KNX-TD004D-EN-P - February 2018

Copyright © 2019 Rockwell Automation, Inc. All rights reserved. Printed in the U.S.A.