First angle projection. Original drawing made with Pro/ENGINEER. Set the correct scale factor when adding dimensions after DWG/DXF conversion.

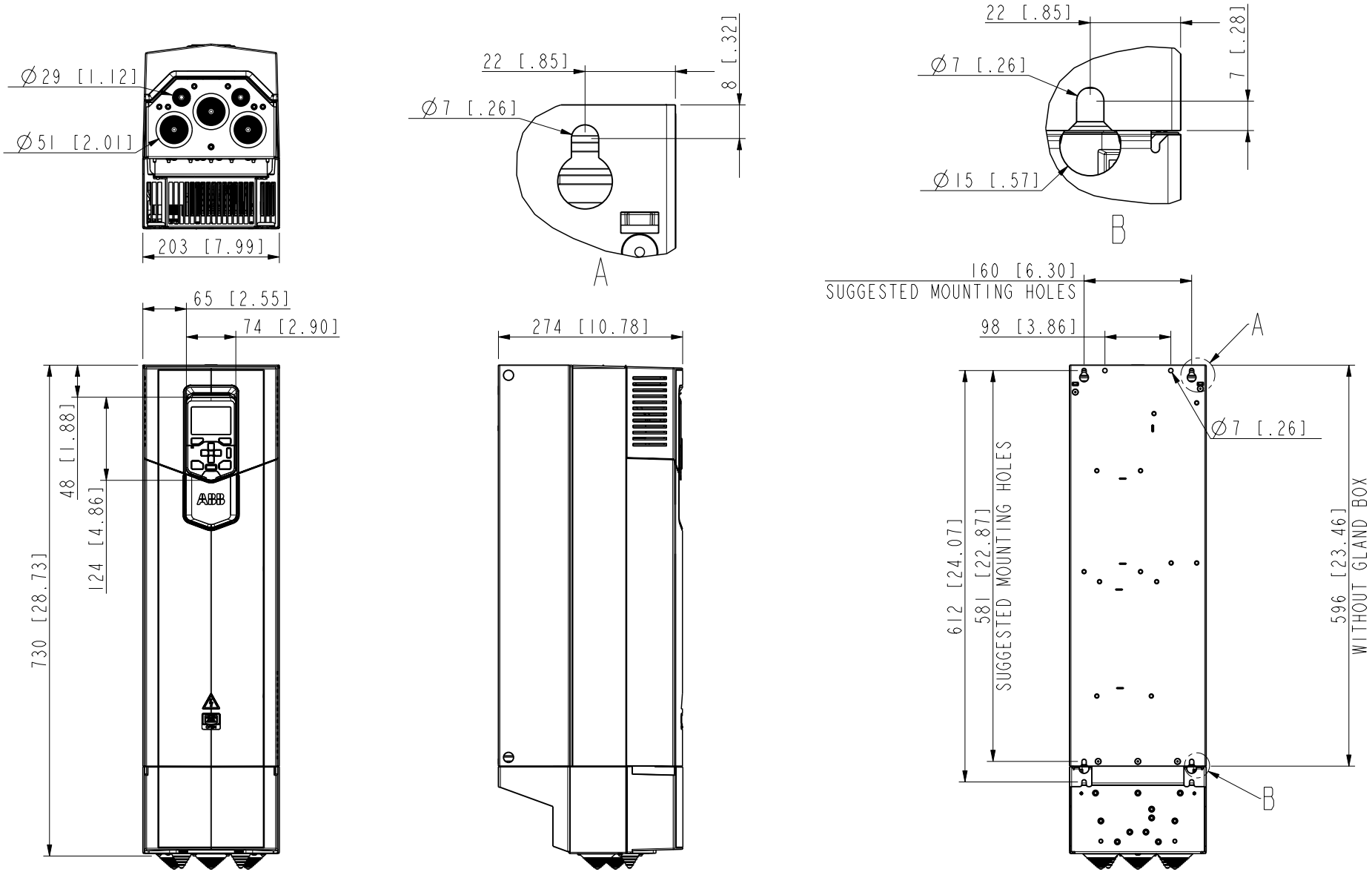

We reserve all rights in this document and in the information contained therein. Reproduction, use or disclosure to third parties without express authority is strictly forbidden.
© ABB Oy

C	IP55 added	02-Oct-12	M.Kauranen
B	Title information updated	11-Oct-11	J.Holappa
S5_MAIN-ASSEMBLY (ASSEM)	-.45	C.4+
3AUA0000097965		

Based on	Prepared	J.Holappa	11-Oct-11
Customer	Check.	W.Diaz	11-Oct-11
	Appr.	S.Lilja	11-Oct-11
Cust. Doc. No.	Project name		
ABB Ref. No.	Weight kg	254918902.18	

Title: DIMENS. DRAWING
R5 IP21/IP55 DIMENSIONAL DRAWING
ACS880 R5

ABB DRIVES

Doc. des. ASSEMBLY DRAWING	Scale 3:25	Form A4	
Resp.dept. EJO	Rev.ind. C (AP)		Lang. EN
Doc. No. 3AUA0000097965			Sheet 1
			Total 2