Bulletin 700-SH — Hockey Puck Relay

- 100 A max. continuous load (output) current with appropriate heat sink
- 264V AC, 530V AC, or 660V AC max. load voltage options
- 3…32V DC, 4…32V DC, 80…130V AC, 200…260V AC, 20…280V AC/22…48V DC control (input) voltage options
- LED indicator for input/logic ON/OFF status monitoring
- Protective cover for added safety

Table of Contents

Standards Compliance and Certifications

See page 9-185.

Product Selection

	Input-to-Output Isolation Method	Zero Cross Function	Status Indicator	Output (Load) Max. Continuous Current and Rated Voltage Range‡	Rated Input Control Voltage	Cat. No.∗
	Optocoupler	Yes	Yes	10 A @ 42…265V AC	3…32V DC	**700-SH10JZ24**
				10 A @ 42…265V AC	80…130V AC	**700-SH10JA12**
				10 A @ 42…265V AC	200…260V AC	**700-SH10JA22**
				10 A @ 42…530V AC	4…32V DC	**700-SH10HZ25** (Series B)
				25 A @ 42…530V AC	4…32V DC	**700-SH25HZ25** (Series B)
				25 A @ 24…265V AC	3…32V DC	**700-SH25GZ24**
				25 A @ 24…265V AC	20…280V AC/22…48V DC	**700-SH25GA24**
				50 A @ 24…265V AC	3…32V DC	**700-SH50GZ24**
				50 A @ 24…265V AC	20…280V AC/22…48V DC	**700-SH50GA24**
				50 A @ 42…530V AC	4…32V DC	**700-SH50HZ25**
				25 A @ 42…660V AC	4…32V DC	**700-SH25VZ25**
				25 A @ 42…660V AC	20…280V AC/22…48V DC	**700-SH25VA24**
				50 A @ 42…660V AC	4…32V DC	**700-SH50VZ25**
				50 A @ 42…660V AC	20…280V AC/22…48V DC	**700-SH50VA24**
				75 A @ 42…530V AC	4…32V DC	**700-SH75HZ25**
				75 A @ 42…660V AC	4…32V DC	**700-SH75VZ25**
				75 A @ 42…530V AC	20…280V AC/22…48V DC	**700-SH75HA24**
				75 A @ 42…660V AC	20…280V AC/22…48V DC	700-SH75VA24
				100 A @ 42…530V AC	4…32V DC	**700-SH100HZ25**
				100 A @ 42…530V AC	20…280V AC/22…48V DC	700-SH100HA24
				100 A @ 42…660V AC	4…32V DC	**700-SH100VZ25**
				100 A @ 42…660V AC	20…280V AC/22…48V DC	700-SH100VA24
		Yes	No	5A @ 3...60V DC	3…32V DC	**700-SH5FZ24**
		Yes	Yes	25 A @ 90…280V AC	4…20 mA DC	**700-SH25WA25**
				50 A @ 90…280V AC	4…20 mA DC	700-SH50WA25

∗ All catalog numbers are Series A unless noted.
❄ This type is also called Phase Angle 0.
‡ When used with heat sink.

9

	Description	Pkg. Quantity	Cat. No.
	**Heat Sink— Panel or DIN Rail Mount**	1	**700-SN10**
	**Heat Sink— Panel or DIN Rail Mount**	1	**700-SN25**
	**Heat Sink— Panel or DIN Rail Mount**	1	**700-SN50**
	**Heat Sink— Panel or DIN Rail Mount**	1	700-SN50HC
	**Heat Sink— Panel or DIN Rail Mount**	1	700-SN50VHC
	**DIN (#3) symmetrical hat rail** 35 x 7.5 x 1 m	10	**199-DR1**
	Thermal Conductive Pads	50	700-SHCPAD
	Plastic Covers — for DC output version	25	700-SHCOV
	Thermal Adapters - for 100 A Wire	10	700-SHTRMA

Control/Input Ratings

Cat. No.	Operating Voltage	Input Current @ Max. Voltage	Voltage Level Pickup Voltage	Drop-Out Voltage
700-SH10J…	3…32V DC	12 mA	2.75V DC max.	1.2V DC min.
	80…130V AC	13 mA	70V AC max.	30V AC min.∗
	200...280V AC	13 mA	190V AC max.	90V AC min.
700-SH_ _ H…	4…32V DC	12 mA	4V DC max.	1V DC min.
	20…280V AC/22…48V DC	20 mA	18V AC/DC	6V AC/DC
700-SH_ _ G…	3…32V DC	12 mA	2.5V DC	1.2V DC
	20…280V AC/22…48V DC	20 mA	-32V DC	6V AC/DC
700-SH_ _ V…	4…32V DC	12 mA	3.5V DC	1.2V DC
	20…280V AC/22…48V DC	20 mA	18V AC/DC	6V AC/DC
700-SH_ _ W…	Current Control	4…20 mA	—	—
700-SH_ _ F…	3…32V DC	12 mA	3V DC max.	1.0V DC

∗ When specified heatsink is used.

Output Ratings

Cat. No.	Load Voltage Range	Applicable Load Current with Heat Sink [A]❄
700-SH5FZ24	3…60V DC	0.001…5 A DC
700-SH10J…	42…265V AC	0.15…10
700-SH10H…	42…530V AC	0.15…10
700-SH25G…	24…265V AC	0.15…25
700-SH25H…	42…530V AC	0.15…25
700-SH25V…	42…660V AC	0.15…25
700-SH25W…	90…280V AC	0.15…25
700-SH50G…	24…265V AC	0.15…50
700-SH50H…	42…530V AC	0.15…50
700-SH50V…	42…660V AC	0.15…50
700-SH50W…	90…280V AC	0.15…50
700-SH75H…	42…530V AC	0.15…75
700-SH75V…	42…660V AC	0.15…75
700-SH100H…	42…530V AC	0.15…100
700-SH100V…	42…660V AC	0.15…100

❄ AC unless indicated.

Characteristics

Description	Cat. Nos. 700-SH10, 25, 50 (not including 700-SH_ _W)	Cat. Nos. 700-SH75, 100
Pick-up Time	1/2 of load power source cycle time(DC input) 1 of load power source cycle time (AC input)	
Drop-out Time	1/2 of load power source cycle time (DC input) 2 of load power source cycle time (AC input)	
Output ON Voltage Drop	1.6V (RMS) max.	
Output Leakage Current	<3 mArms 100 MΩ min (@ 500V DC)	
Insulation Resistance	100 MΩ min. (at 500V DC)	
Dielectric Strength	>4000 VACrms	
Vibration Resistance	Malfunction: 10…55 Hz, 1.5 mm double amplitude	
Shock Resistance	Malfunction: 1000 m/s²	
Ambient Temperature	Operating: –20…+70 °C with no icing or condensation	
	Storage: –40…+100 °C with no icing or condensation	
Ambient Humidity	0…95% no condensing	
Standards Compliance	UL 508, CSA C22.2 No. 14, EN/IEC 60947-1, -4-2, -4-3, EN 61000-6-2, EN 61000-6-4	
Certifications	cURus Recognized (File No. E14843, Guide NPNT2), CSA Certified (File No. 240924)	
Weight	Approx. 60 g	Approx. 100 g

Characteristics

Description	Cat. No. 700-SH_ _W
Pick-up Current	4.2 mA
Drop-out Current	4.1 mA
Voltage Drop	<10V DC @ 20 mA
Leakage Current	<3 mA
Insulation Voltage	<4000 Vrms
Vibration Resistance	Malfunction: 10…55 Hz, 1.5 mm double amplitude
Shock Resistance	Malfunction: 1000 m/s^2
Ambient Temperature	Operating: –20…+70 °C with no icing or condensation
Ambient Humidity	0…95% no condensing
Standards Compliance	UL 508, CSA C22.2 No. 14, EN/IEC 60947-1, -4-2, -4-3, EN 61000-6-2, EN 61000-6-4
Certifications	cURus Recognized (File No. E14843, Guide NPNT2), CSA Certified (File No. 24024)
Weight	Approx. 60 g

Description	Cat. No. 700-SH5FZ24
Pick-up Voltage	<3V DC
Drop-out Voltage	>1V DC
Activating Frequency	<100 Hz
Input Impedance	1kΩ
Response Time Pick-up @ Vin > 5V	<4000 uS
Response Time Drop-out	<1 mS
On-state Voltage Drop @ Rated Current	<1.5V
Off-state Current Drop @ Rated Voltage	<1 mA
Insulation Voltage	<1 mA
Vibration Resistance	Malfunction: 10…55 Hz, 1.5 mm double amplitude
Shock Resistance	Malfunction: 1,000 m/s^2
Ambient Temperature	Operating: –20…+70 °C with no icing or condensation
Ambient Humidity	0…95% no condensing
Standards Compliance	UL 508, CSA C22.2 No. 14, EN/IEC 60947-1, -4-2, -4-3, EN 61000-6-2, EN61000-6-4
Certifications	cURus Recognized (File No. E14843, Guide NPNT2), CSA Certified (File No. 240924)
Weight	Approx. 60 g

Surge Current vs. Ambient Temperature Characterstics

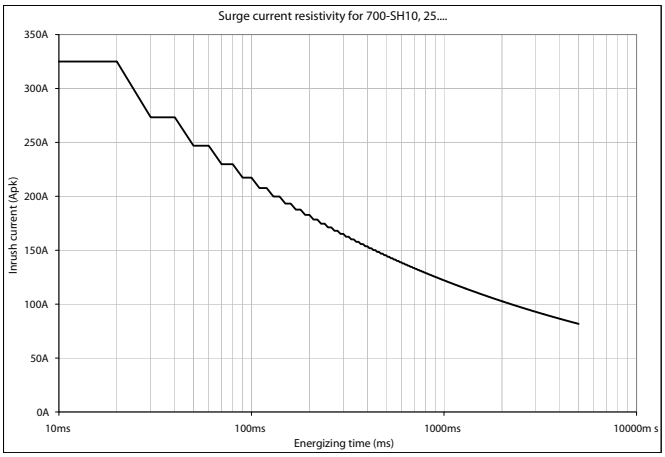

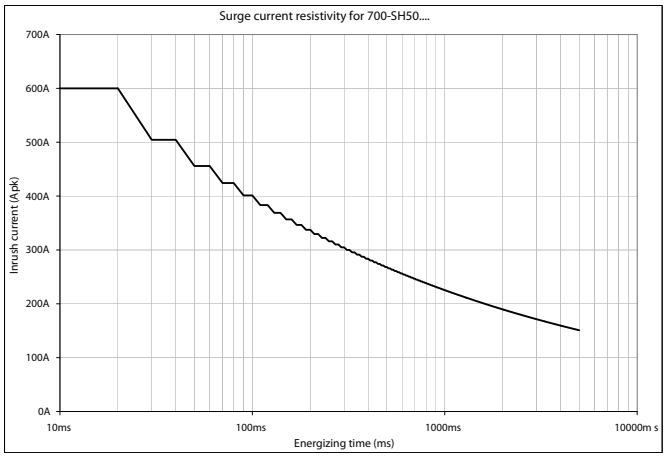

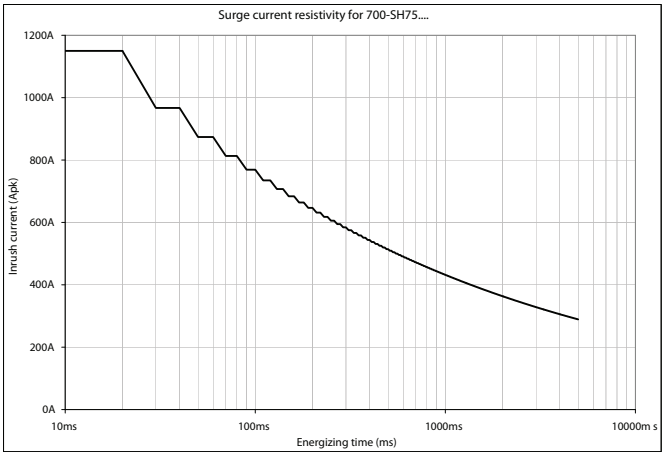

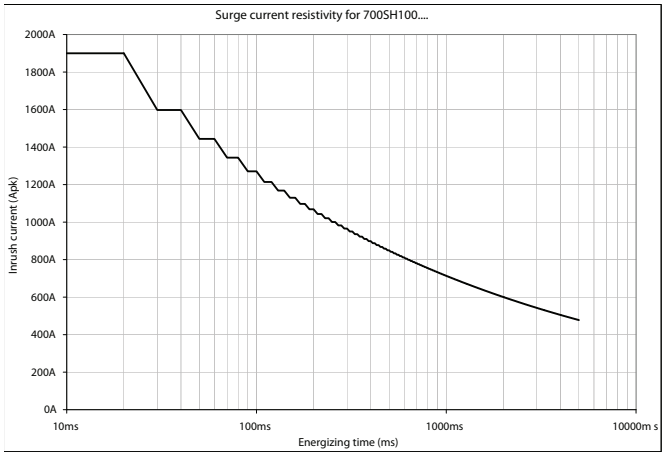

Load Current vs. Ambient Temperature Characteristics

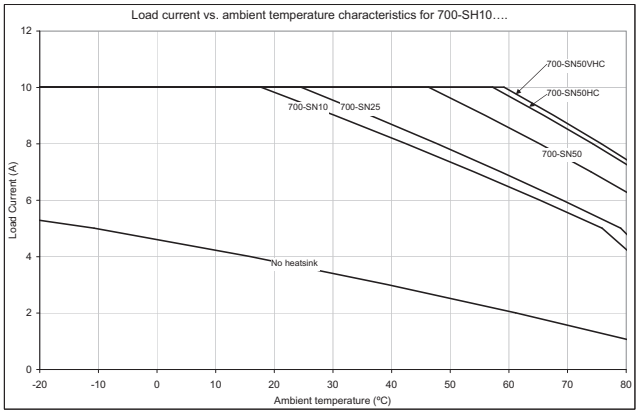

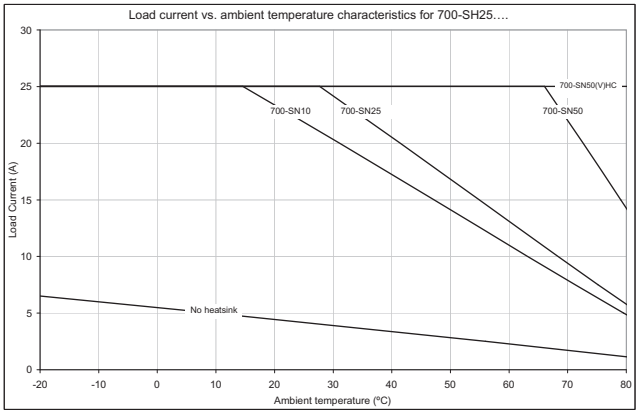

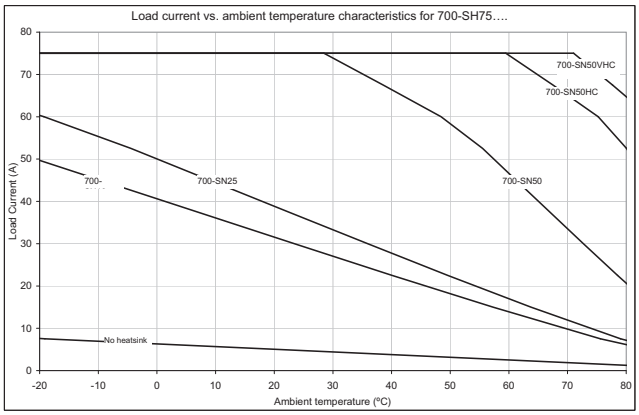

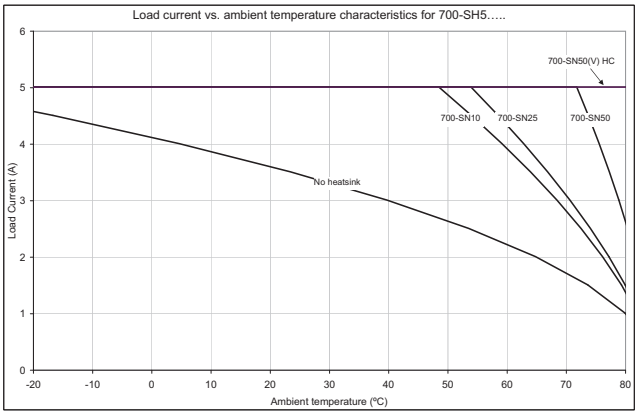

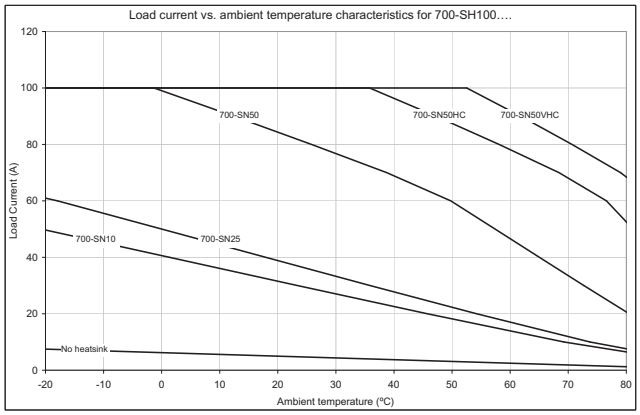

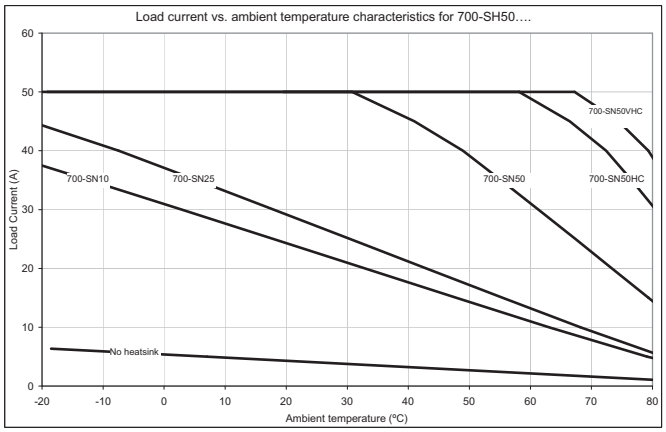

Mounting Considerations∗‡§♣

All units are in mm's unless otherwise indicated. To convert to inches multiply by 0.0394. Dimensions are not intended for manufacturing purposes.

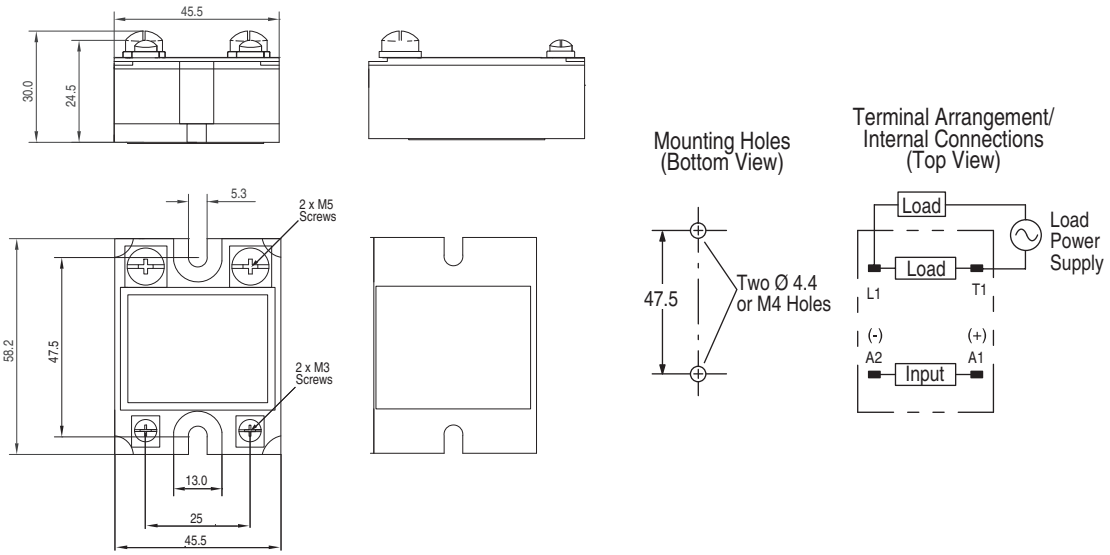

Cat. No. 700-SH5F…

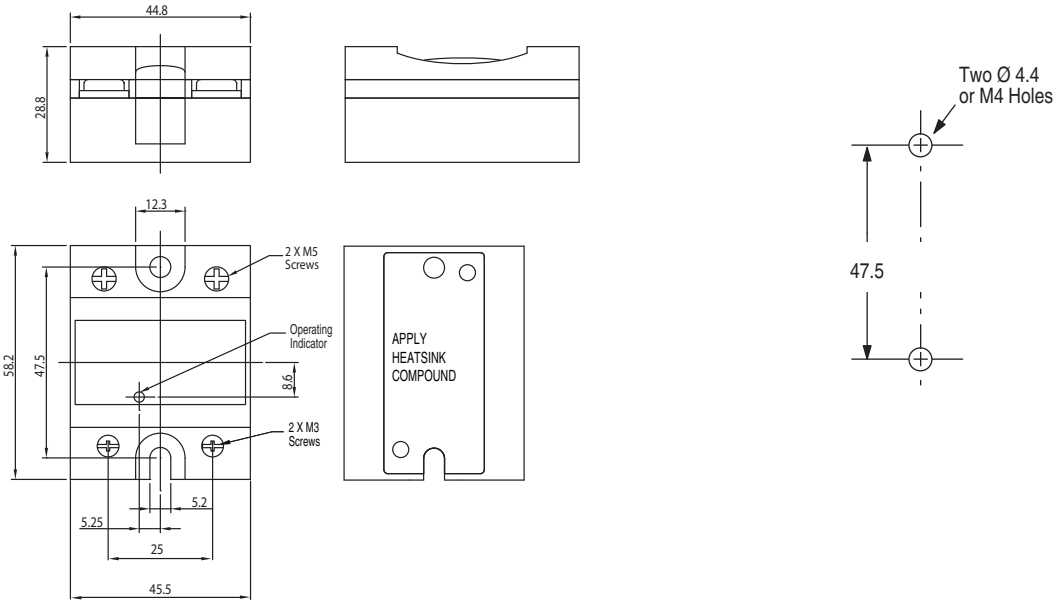

Cat. No. 700-SH10, -SH25, -SH50, -SH75, -SH100

∗ The proper mounting orientation of the heat sink is so the heat fins run perpendicular to the floor (vertical) to maximize ventilation flow. If the fins do not run perpendicular to the floor, a 30% current derating is required.

‡ When attaching a heat sink to Bulletin 700-SH, apply a thin layer of heat conductive grease (approximately 0.002 in. thick) on the heat sink to maximize heat transfer between the SSR and the heat sink. Recommended types: Silicon based, Dow Corning 340, Toshiba YG6240; Non-silicon based, AOS company type 53300 (Cat. No. 46801-010-01).

§ Tighten the SSR panel/heat sink mounting screws to a torque of 0.78…0.98 N•m (6.9…8.7 lb•in).

♣ Tighten the SSR terminal wiring screws as follows M4: 0.98…1.37 N•m (8.67…12.12 lb•in), M5: 1.57…2.35 N•m (13.89…20.8 lb•in).

700-SN10

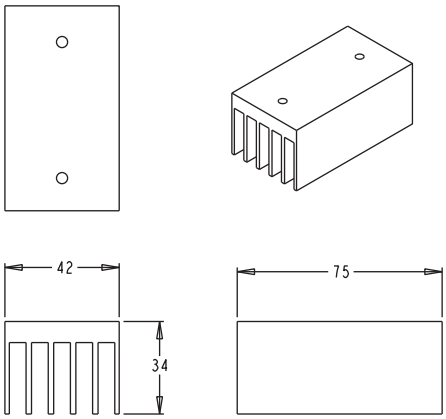

700-SN25

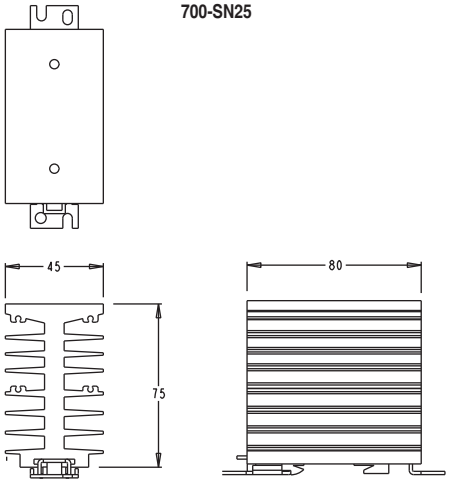

700-SN50

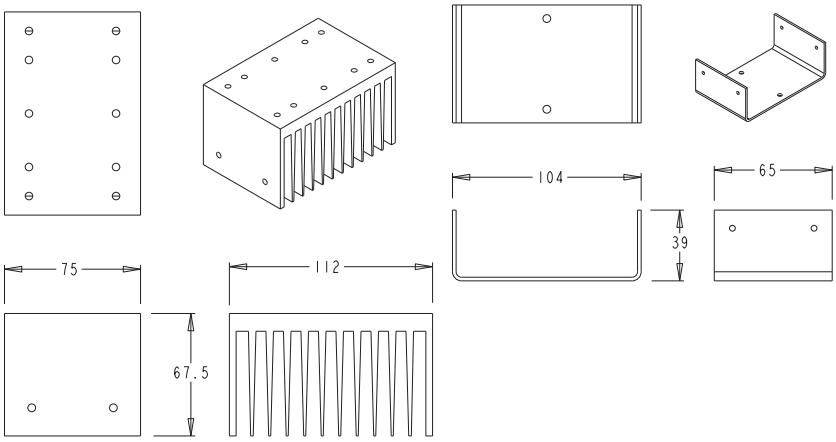

700-SN50HC

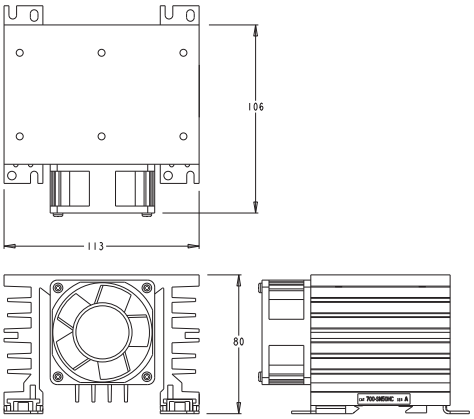

700-SN50VHC

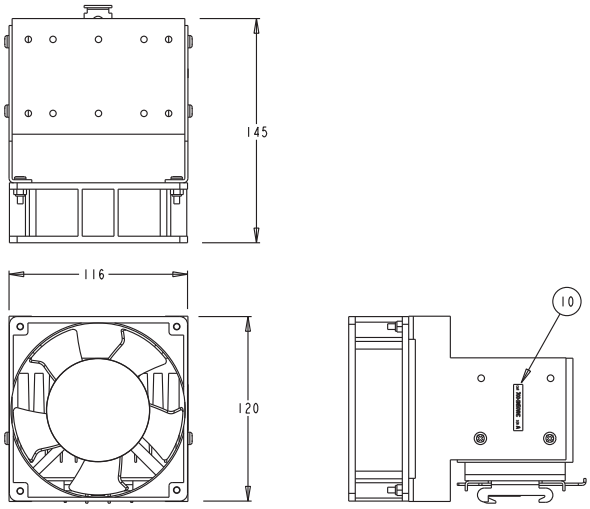

➢ Tighten the heat sink mounting screws (M4) to a torque of 0.98…1.37 N•m (8.67…12.12 lb•in).
⌘ Heat sink weight: Cat. Nos. 700-S10 = 200 g, 700-S20 = 400 g, 700-S30 = 560 g.

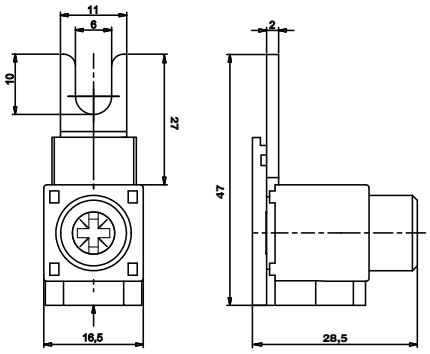

Cat. No.700-SHTRMA

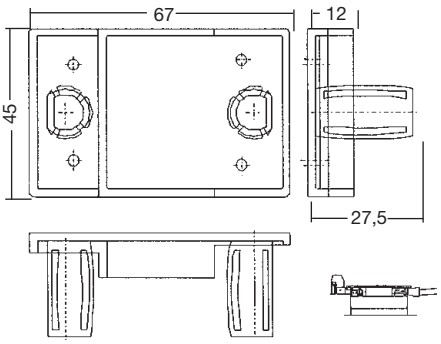

Cat. No. 700-SHCOV

Load Connection

- For an AC load, use a power supply rated at 50 or 60 Hz. The maximum operating frequency is 10 Hz.
- The Bulletin 700-SH has a built-in varistor for surge/inrush protection of AC loads. If additional suppression is required, connect an external varistor across the load device terminals. Select a varistor which meets the load voltage condition outlined in the table below.

Load Voltage [V AC]	Varistor Voltage [V]	Varistor Surge Resistance
100…120	240…270	1000 A min.
200…240	440…470	
380…480	820…1000	

Zero Cross Function

A SSR with a zero cross function operates when an AC load voltage reaches the zero point or its vicinity. This reduces clicking noises when the load is switched and minimizes the influence of an inductive load, (e.g., lamp, heater, or motor) on the power supply because the inrush current of the load is reduced. This can also minimize the scale of the inrush current protection circuit.

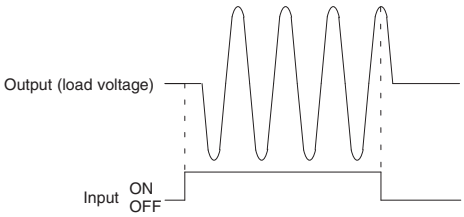

At a low applied voltage (e.g., 24V AC) the load current is not fully supplied. When the unit is switched ON, the voltage required to power the unit deprives the output signal of the necessary voltage level and thus creates loss time. The lower the load voltage is, the greater the loss time is. This condition, however, will not create any serious problems.

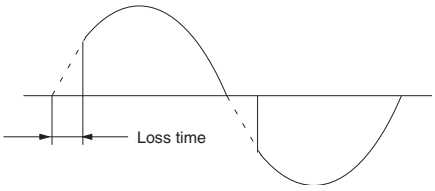

For a DC inductive load, a diode should be connected parallel to the load to absorb the counter electromotive force (OFF) of the load.

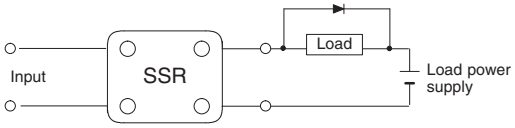

Note: For additional details when using Solid-State Relays, refer to pub. 700-AT001*, Solid-State Relay Application Guide.