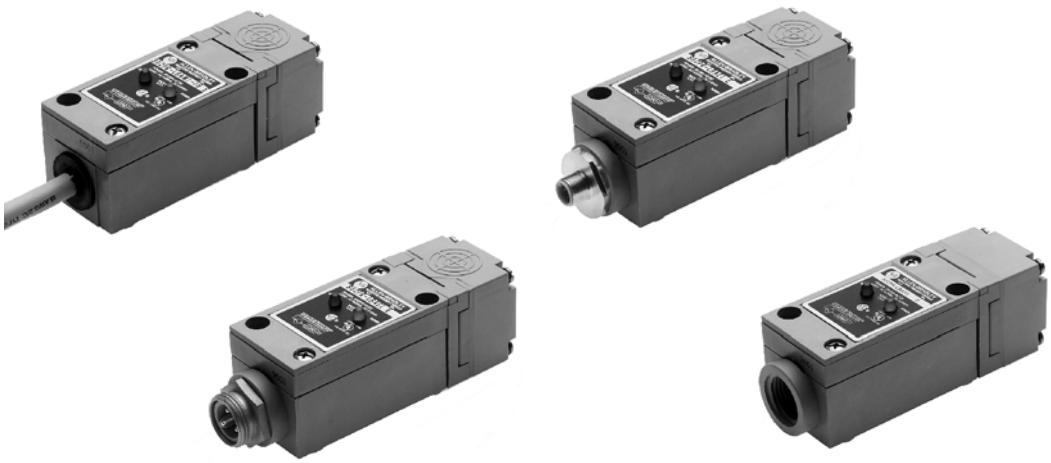

Description

Bulletin 802PR inductive proximity sensors are self-contained, 2-wire devices designed to detect the presence of ferrous and nonferrous metal objects without touching them. Types LA and XA are high-output AC models designed to switch current loads up to 1 A, while types LB and XB are AC/DC solid-state switches made to interface directly with programmable controllers.

ATTENTION	High-output models should not be used in solid-state switching, TTL, or programmable controller operations.

Each sensor is housed in a self-extinguishing glass-reinforced polyester body. Special hazardous location models are available which meet Division 2 enclosure standards in Classes I, II, and III (see specifications). Switch constructions include top and side sensing models. The side-sensing head can be rotated in 90° increments to sense in four directions. These devices are available with a threaded conduit opening, conduit coupler, 3-pin mini connector, 3-pin micro connector, or pre-wired cable.

Features

- Multiple sensing directions
- Cable, conduit, or quick-disconnect styles
- Short circuit protection (AC/DC models)
- Overload protection (AC/DC models)
- Transient noise protection
- False pulse protection
- Hazardous location models are available
- UL Listed, CSA Certified and CE Marked for all applicable directives

Styles

Accessories

General Information

802PR 2-Wire AC/DC

Limit Switch Style

802PR AC/DC Cable Style

802PR AC/DC Mini Quick-Disconnect Style

802PR AC/DC Micro Quick-Disconnect Style

802PR AC/DC Conduit Style

Specifications

Load Current	AC 4…25 mA; DC 2…25 mA
Leakage Current	≤1.7 mA at 132V, ≤2.5 mA at 250V
Operating Voltage	20…250V AC/DC
Voltage Drop	≤10V
Repeatability	≤10% typical
Hysteresis	≤10% typical
Transient Noise Protection	Incorporated
Short Circuit Protection	Incorporated
Overload Protection	Incorporated
False Pulse Protection	Incorporated
Radio Frequency Protection	10V per meter; frequency range 20…1000 MHz
Certifications	UL Listed, CSA Certified and CE Marked for all applicable directives
Enclosure	NEMA 1, 2, 3, 4, 4X❶, 12, 13, IP65 (IEC529) Self extinguishing glass-reinforced polyester body
Connections	Cable: 2.4 m (8 ft) length 2-conductor ToughLink™ Quick-Disconnect: 3-pin micro style 3-pin mini style Conduit Opening or Conduit Coupler: Internal thread with screw terminals (use #18–14 AWG wire)
LEDs	Green: Power; Red: Output energized (both on in SCP/Overload)
Operating Temperature [C (F)]	-25…+75° (-13…+167°)
Shock	30 g, 11 ms
Vibration	55 Hz, 1 mm amplitude, 3 planes

❶ Corrosion resistant models

Features

- 2-wire operation
- 2-conductor or 3-pin connection
- 20…250V AC/DC (for solid state inputs)
- Normally open output
- Short circuit, overload, false pulse, RFI and transient noise protection
- Corrosion resistant models
- 2 LEDs
- UL Listed, CSA Certified and CE Marked for all applicable directives

Correction Factors

Target Material	Correction Factor
Steel	1.0
Stainless Steel	0.9
Brass	0.8
Aluminum	0.75
Copper	0.7

802PR 2-Wire AC/DC, Conduit Style

Limit Switch Style

Product Selection

Sensing Direction	Nominal Sensing Distance mm (inches)	Shielded	Output Configuration	Switching Frequency [Hz]	Corrosion Resistant	Connection Type	Cat. No. Conduit Style
Side	17 (0.67)	Y	N.O.	20	Y	1/2 in.-14NPT	802PR-XBAB1
					N		802PR-LBAB1
					Y	ISO 20-1.5	802PR-XBAB1-S6
					N		802PR-LBAB1-S6
					N	Conduit Coupler	802PR-LBAA1
Top	17 (0.67)	Y	N.O.	20	Y	1/2 in.-14NPT	802PR-XBAH1
					N		**802PR-LBAH1**
					Y	ISO 20-1.5	802PR-XBAH1-S6
					N		802PR-LBAH1-S6
					N	Conduit Coupler	802PR-LBAJ1

Approximate Dimensions [mm (in.)]

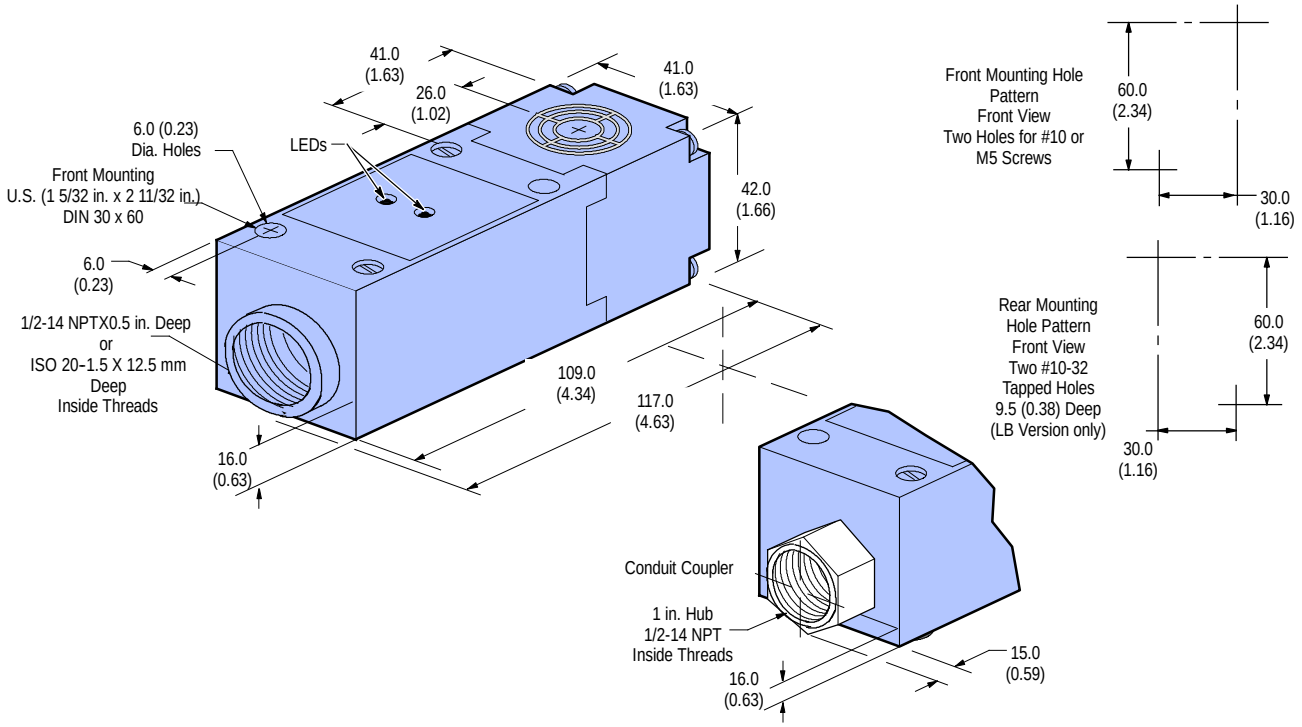

Note: Side sensing model heads can be turned in 90° increments to accommodate 4 side sensing positions.

Wiring Diagram

Normally Open

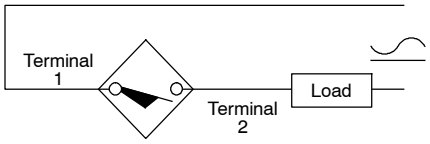

Note: Load can be switched to Terminal 1.